Full lift safety valve / Standard safety valve

ARI-SAFE
Full lift safety valve D/G
Standard safety valve F

- Type-test approved acc. to DIN EN ISO 4126-1 / AD2000-A2 / TRD421
- TÜV · SV · . . -663 · D/G **Figure 901/911**
- TÜV · SV · . . -663 · F **Figure 901/911**
- Further approvals: see inside

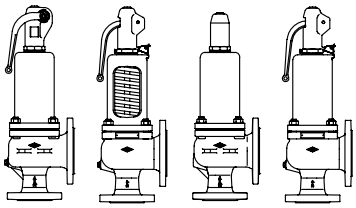
Fig. 901 902 911 912

Page 2

ARI-SAFE
Standard safety valve for the heating technology

- Type-test approved acc. to DIN EN ISO 4126-1 / DIN EN 12828 / TRD 721
- TÜV · SV · . . -688 · D/G/H **Figure 903**
- TÜV · SV · . . -688 · D **Figure 904**

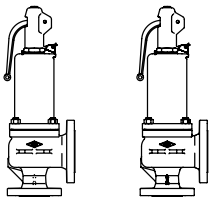
Fig. 903 904

Page 14

ARI-SAFE-P
Standard safety valve D/G/F

- Type-test approved acc. to DIN EN ISO 4126-1 / AD2000-A2
- TÜV · SV · . . -811 · D/G **Figure 921/923**
- TÜV · SV · . . -811 · F **Figure 921/923**

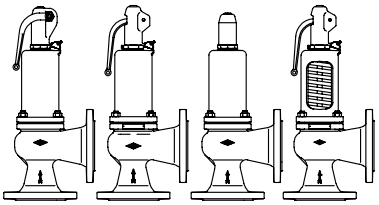
Fig. 921 922 923 924

Page 20

ARI-SAFE-TC
Full lift safety valve D/G
Standard safety valve F

- Type-test approved acc. to DIN EN ISO 4126-1 / AD2000-A2 / TRD421
- TÜV · SV · . . -995 · D/G **Figure 941-943**
- TÜV · SV · . . -995 · F **Figure 941/943**

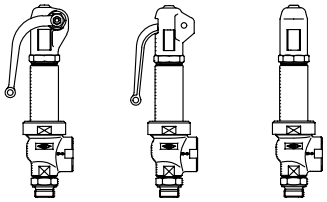
Fig. 941 942 943

Page 26

ARI-SAFE-TC
Standard safety valve for the heating technology

- Type-test approved acc. to DIN EN ISO 4126-1 / DIN EN 12828 / TRD 721
- TÜV · SV · . . -997 · D/G/H **Figure 945**
- TÜV · SV · . . -997 · D **Figure 946**

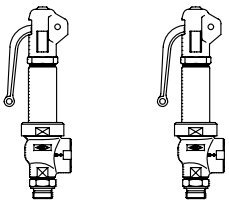
Fig. 945 946

Page 30

ARI-SAFE-TCP
Standard safety valve D/G/F

- Type-test approved acc. to DIN EN ISO 4126-1 / AD2000-A2
- TÜV · SV · . . -1041 · D/G **Figure 961-963**
- TÜV · SV · . . -1041 · F **Figure 961/963**

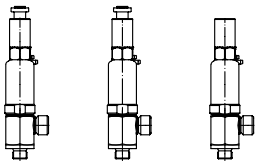
Fig. 961 962 963

Page 34

ARI-SAFE-TCS
Standard safety valve D/G/F

- Type-test approved acc. to DIN EN ISO 4126-1 / AD2000-A2
- TÜV · SV · . . -1041 · D/G **Figure 951-953**
- TÜV · SV · . . -1041 · F **Figure 951/953**

ALSO FOR HORIZONTAL APPLICATION

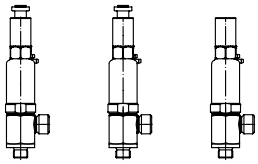
Fig. 951 952 953

Page 38

Fig. 900

Fig. 940

Fig. 920

Fig. 950/960

Features:

- Direct loaded with spring
- Wear resistant seat/disc
- Precision disc alignment and guide
- Possible with soft seal disc
- Possible with EPDM bellows
- Possible with stainless steel bellows
- ARI-SAFE-TC/TCP/TCS: All common thread types

ARI-SAFE-- Full lift safety valve D/G, Standard safety valve F

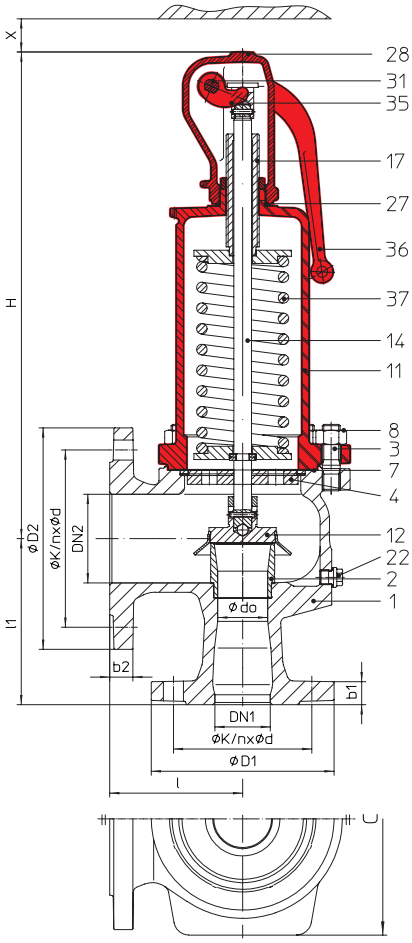

Fig. ... .901
closed lifting device,
closed bonnet

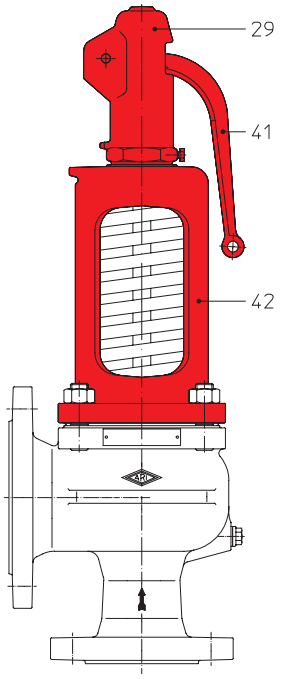

Fig. ... .902
open lifting device,
open bonnet

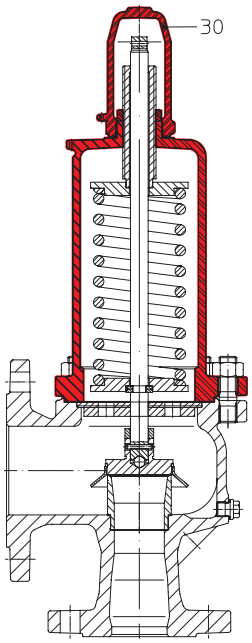

Fig. ... .911
gastight cap,
closed bonnet

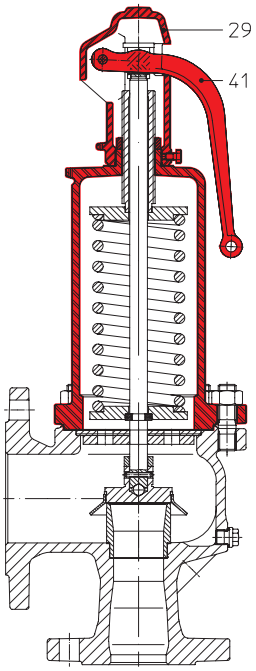

Fig. ... .912
open lifting device,
closed bonnet

Figure	Nominal pressure	Material	Nominal diameter	Temperature range	Flange	Flangeholes / -thickness tolerances
12.901 / 902 / 911 / 912	PN16/16	EN-JL1040	DN20/32 - 150/250	-10°C to +300°C	DIN EN 1092-2	DIN 2533/2533
23.901 / 902 / 911 / 912	PN25/16 (PN25/10)	EN-JS1049	DN200/300 - 250/350	-10°C to +350°C	DIN EN 1092-2	DIN 2534/2533
25.901 / 902 / 911 / 912	PN40/16	EN-JS1049	DN20/32 - 250/350	-10°C to +350°C	DIN EN 1092-2	DIN 2535/2533
34.901 / 902 / 911 / 912	PN25/16 (PN25/10)	1.0619+N	DN200/300 - 250/350	-10°C to +450°C	DIN EN 1092-1	DIN 2544/2543
35.901 / 902 / 911 / 912	PN40/16	1.0619+N	DN15/25 - 250/350	-10°C to +450°C	DIN EN 1092-1	DIN 2545/2543
55.901 / 911	PN40/16	1.4408	DN15/25 - 250/350	-60°C to +400°C	DIN EN 1092-1	DIN 2545/2543

Construction		
Safety valve, spring loaded, direct loaded		
Requirement		
Acc. to EN ISO 4126-1, VdTÜV-leaflet 100, AD2000-A2, material selection observe TRB 801 No. 45!		
Type-test approval		
Full lift safety valve: (acc. to VdTÜV-leaflet 663)	Fig. 901/902/911/912	TÜV · SV · . . -663 · D/G
Standard safety valve:	Fig. 901/911	TÜV · SV · . . -663 · F

Sizing	
for steam, air and water refer to capacity tables, calculations acc. to EN ISO 4126-1; TRD 421 and AD2000-A2.	
Details required	
Medium gasform:	Mass flow (kg/h), molar mass (kg/kmol), Isotropic exponent, temperature (°C), set pressure (barg), back pressure (barg)
Medium liquid:	Mass flow (kg/h), density (kg/m3), viscosity, temperature (°C), set pressure (barg), back pressure (barg)
Order data:	
ARI-SAFE-Safety valve, Figure ..., DN .../..., PN ..., Material ..., Set pressure ...bar	

	standard: without metal bellows	**DN15/25 - 100/150 optional:** **with metal bellows** (refer to page 14)
Superimposed back pressure	no backpressure allowed	on request
Built up back pressure	max. 10% from set pressure (higher on request)	on request

Parts						
Pos.	**Sp.p.**	**Description**	**Fig. 12.901/902/911/912**	**Fig. 23./25.901/902/911/912**	**Fig. 34./35.901/902/911/912**	**Fig. 55.901/911**
1		Body	EN-GJL-250 , EN-JL1040	EN-GJS-400-18U-LT, EN-JS1049	GP240GH+N, 1.0619+N	GX5CrNiMo19-11-2, 1.4408
2		Seat	X6CrNiMoTi17-12-2, 1.4571			
3		Studs	25CrMo4, 1.7218			A4 - 70
4		Spindle guide	X20Cr13+QT, 1.4021+QT (≥ DN65: EN-GJS-400-18U-LT, EN-JS1049)			X6CrNiMoTi17-12-2, 1.4571
7	x	Gasket	Pure graphite (CrNi laminated with graphite)			
8		Hexagon nut	C35E, 1.1181			A4
11		Bonnet, closed	EN-GJL-250 , EN-JL1040	EN-GJS-400-18U-LT, EN-JS1049		GX5CrNiMo19-11-2, 1.4408
12		Disc	X39CrMo17-1+QT, 1.4122+QT			X6CrNiMoTi17-12-2, 1.4571
14	x	Spindle	X20Cr13+QT, 1.4021+QT			X6CrNiMoTi17-12-2, 1.4571
17		Adjusting screw	X20Cr13+QT, 1.4021+QT			X2CrNiMo17-12-2, 1.4404
22		Plug screw	5.8			A4
27	x	Sealing ring	CuFA (≥ DN125: Graphit)			X6CrNiMoTi17-12-2, 1.4571
28		Cap, closed	EN-GJL-250 , EN-JL1040	EN-GJS-400-18U-LT, EN-JS1049		GX5CrNiMo19-11-2, 1.4408
29		Cap, open	EN-GJL-250 , EN-JL1040	EN-GJS-400-18U-LT, EN-JS1049		--
30		Cap, gastight	EN-GJL-250 , EN-JL1040	EN-GJS-400-18U-LT, EN-JS1049		GX5CrNiMo19-11-2, 1.4408
31	x	Packing rings	Pure graphite			
35		Lift fork	EN-GJS-400-15, EN-JS1030 (DN200: GP240GH+N, 1.0619+N)			GX5CrNiMo19-11-2, 1.4408
36		Lever, closed	EN-GJS-400-18U-LT, EN-JS1049			X6CrNiMoTi17-12-2, 1.4571
37	x	Spring	FDSiCr / 51CrV4, 1.8159			X10CrNi18-8, 1.4310
41		Lever, open	EN-GJS-400-18U-LT, EN-JS1049			--
42		Bonnet, open	EN-GJL-250 , EN-JL1040	EN-GJS-400-18U-LT, EN-JS1049		--
43		Bellows (optional)	EPDM 70 Shore A			
55		Bellows unit (optional)	X6CrNiMoTi17-12-2, 1.4571			
70		Balanced piston (at bellows)	X6CrNiMoTi17-12-2, 1.4571			
	└ Spare parts					

DN1 / DN2		15 / 25	20 / 32	25 / 40	32 / 50	40 / 65	50 / 80	65 / 100	80 / 125	100 / 150	125 / 200	150 / 250	200 / 300	250 / 350
Spring ranges: Standard design														
Full lift safety valve Fig. 901/902/911/912	(barü)	0,2 - 0,45	0,2 - 0,5	0,2 - 0,5					0,2 - 0,5	0,2 - 0,5	0,2 - 0,4	0,2 - 0,5	0,2 - 0,3	0,2 - 0,3
	(barü)	> 0,45 - 0,9	> 0,5 - 1	> 0,5 - 1					> 0,5 - 1	> 0,5 - 1	> 0,4 - 0,75	> 0,5 - 1	> 0,3 - 0,5	> 0,3 - 0,35
	(barü)	> 0,9 - 1,3	> 1 - 1,5	> 1 - 1,5					> 1 - 1,5	> 1 - 1,5	> 0,75 - 1,1	> 1 - 1,5	> 0,5 - 0,85	> 0,35 - 0,6
	(barü)	> 1,3 - 2	> 1,5 - 2,5	> 1,5 - 2					> 1,5 - 2	> 1,5 - 2	> 1,1 - 1,5	> 1,5 - 1,9	> 0,85 - 1,1	> 0,6 - 0,7
	(barü)	> 2 - 2,5	> 2,5 - 4,5	> 2 - 2,7					> 2 - 2,7	> 2 - 2,5	> 1,5 - 1,9	> 1,9 - 2,3	> 1,1 - 1,4	> 0,7 - 0,9
	(barü)	> 2,5 - 3,2	> 4,5 - 8,5	> 2,7 - 3,6					> 2,7 - 3,6	> 2,5 - 3	> 1,9 - 2,5	> 2,3 - 2,7	> 1,4 - 1,8	> 0,9 - 1,5
	(barü)	> 3,2 - 4,3	> 8,5 - 19	> 3,6 - 5					> 3,6 - 5	> 3 - 3,6	> 2,5 - 2,95	> 2,7 - 3,3	> 1,8 - 2,0	> 1,5 - 1,9
	(barü)	> 4,3 - 5,6	> 19 - 28	> 5 - 9					> 5 - 9	> 3,6 - 5	> 2,95 - 4	> 3,3 - 4,1	> 2,0 - 2,2	> 1,9 - 2,6
	(barü)	> 5,6 - 10	> 28 - 35	> 9 - 16					> 9 - 14	> 5 - 9	> 4 - 5,7	> 4,1 - 5,5	> 2,2 - 2,4	> 2,6 - 3,0
	(barü)	> 10 - 20	> 35 - 40	> 16 - 22					> 14 - 19	> 9 - 14	> 5,7 - 8,2	> 5,5 - 7,4	> 2,4 - 2,7	> 3,0 - 4,5
	(barü)	> 20 - 25,9		> 22 - 28					> 19 - 25	> 14 - 19	> 8,2 - 12	> 7,4 - 11	> 2,7 - 3,1	> 4,5 - 6,0
	(barü)	> 25,9 - 40		> 28 - 34						> 19 - 24	> 12 - 17	> 11 - 16	> 3,1 - 4,0	> 6,0 - 7,0
	(barü)			> 34 - 40							> 17 - 24	> 16 - 21	> 4,0 - 4,8	> 7,0 - 8,5
	(barü)										> 24 - 27	> 21 - 26	> 4,8 - 5,6	> 8,5 - 10,0
	(barü)												> 5,6 - 6,8	> 10,0 - 11,5
	(barü)												> 6,8 - 7,8	> 11,5 - 13,0
	(barü)												> 7,8 - 9,5	> 13,0 - 14,0
	(barü)												> 9,5 - 11,0	> 14,0 - 15,0
	(barü)												> 11,0 - 13,0	> 15,0 - 16,0
	(barü)												> 13,0 - 15,0	> 16,0 - 20,0
	(barü)												> 15,0 - 17,5	
	(barü)												> 17,5 - 21,0	
	(barü)												> 21,0 - 25,0	

Information / restriction of technical rules need to be observed!
A production permission acc. to TRB 801 No. 45 is available.
The engineer, designing a system or a plant, is responsible for the selection of the correct valve.
Resistance and fitness must be verified
(contact manufacturer for information, refer to Product overview and Resistance list).

Spring ranges: Bellows design (optional)														
Standard safety valve Fig. 901/911	(barü)	5 - 6,4	3 - 3,7	2,5 - 3,3	2,5 - 3,2	2,6 - 3,6	2,8 - 3,4	2,5 - 3,7	2,5 - 3,3	2,5 - 3,5	1,1 - 1,5	1,1 - 1,3	2,4 - 2,7	2,1 -2,4
	(barü)	> 6,4 - 7,7	> 3,7 - 4,6	> 3,3 - 4,6	> 3,2 - 4	> 3,6 - 4,5	> 3,4 - 4,5	> 3,7 - 4,6	> 3,3 - 4,5	> 3,5 - 4,2	> 1,5 - 2	> 1,3 - 1,7	> 2,7 - 2,9	> 2,4 - 2,6
	(barü)	> 7,7 - 10	> 4,6 - 6,3	> 4,6 - 5,4	> 4 - 5,5	> 4,5 - 5,6	> 4,5 - 8,4	> 4,6 - 5,9	> 4,5 - 5,8	> 4,2 - 4,9	> 2 -2,5	> 1,7 - 2,1	> 2,9 - 3,1	> 2,6 - 2,9
	(barü)	> 10 - 16	> 6,3 - 8,4	> 5,4 - 7	> 5,5 - 6,4	> 5,6 - 7,5	> 8,4 - 10	> 5,9 - 8	> 5,8 - 7,5	> 4,9 - 5,6	> 2,5 - 2,9	> 2,1 - 2,4	> 3,1 - 3,3	> 2,9 - 3,2
	(barü)	> 16 - 18,5	> 8,4 - 10,2	> 7 - 9	> 6,4 - 7,9	> 7,5 - 10	> 10 - 11,5	> 8 - 10	> 7,5 - 8,9	> 5,6 - 7	> 2,9 - 3,5	> 2,4 - 2,8	> 3,3 - 3,6	> 3,2 - 3,6
	(barü)	> 18,5 - 26	> 10,2 - 13	> 9 - 11,7	> 7,9 - 11,5	> 10 - 12,5	> 11,5 - 16	> 10 - 18	> 8,9 - 10,5	> 7 - 8	> 3,5 - 4,2	> 2,8 - 3,1	> 3,6 - 3,9	> 3,6 - 4,1
	(barü)	> 26 - 40	> 13 - 17	> 11,7 - 16	> 11,5 - 18,5	> 12,5 - 16	> 16 - 18,5	> 18 - 24	> 10,5 - 13	> 8 - 9,3	> 4,2 - 5,1	> 3,1 - 3,4	> 3,9 - 4,1	> 4,1 - 4,6
	(barü)		> 17 - 27,5	> 16 - 22	> 18,5 - 25	> 16 - 22	> 18,5 - 23	> 24 - 26	> 13 - 18	> 9,3 - 11,5	> 5,1 - 6,5	> 3,4 - 3,9	> 4,1 - 4,3	> 4,6 - 5,2
	(barü)			> 22 - 30					> 18 - 23	> 11,5 - 14	> 6,5 - 7,5	> 3,9 - 4,8	> 4,3 - 4,8	> 5,2 - 5,8
	(barü)									> 14 - 20	> 7,5 - 9	> 4,8 - 5,8	> 4,8 - 5,5	> 5,8 - 6,5
	(barü)										> 9 - 10,5	> 5,8 - 6,8	> 5,5, - 6,5	> 6,5 - 7,2
	(barü)										> 10,5 - 12,6	> 6,8 - 8,1	> 6,5 - 7,9	> 7,2 - 8,3
	(barü)										> 12,6 - 17	> 8,1 - 9,7	> 7,9 - 9,5	> 8,3 - 9,3
	(barü)										> 17 -25	> 9,7 - 11,3	> 9,5 - 12,3	> 9,3 - 10
	(barü)											> 11,3 - 13	> 12,3 - 15,9	> 10 - 10,8
	(barü)											> 13 - 15	> 15,9 -20	> 10,8 - 11,5
	(barü)											> 15 - 18		> 11,5 - 12,2
	(barü)													> 12,2 - 13

DN1 / DN2			15 / 25	20 / 32	25 / 40	32 / 50	40 / 65	50 / 80	65 / 100	80 / 125	100 / 150	125 / 200	150 / 250	200 / 300	250 / 350
Dimensions															
d0		(mm)	13	18	22,5	29	36	45	58,5	72	90	106	125	165	200
A0		(mm^2)	133	254	398	661	1018	1590	2688	4072	6362	8825	12272	21382	31416
l		(mm)	80	85	100	110	115	120	140	160	180	200	225	300	325
l1		(mm)	90	95	105	115	140	150	170	195	220	250	285	305	340
H		(mm)	260	270	280	330	390	435	545	610	690	845	890	1105	1175
H (Bellows design)		(mm)	290	310	335	390	445	500	620	690	808	919	953	1215	1262
X		(mm)	150	150	150	200	250	300	350	400	500	500	500	500	500
C (Widthupport tongues)	EN-JL1040	(mm)	--	--	--	--	--	--	--	280	332	362	408	--	--
	EN-JS1049	(mm)	--	--	--	--	--	--	--	280	332	362	408	521	600
	1.0619+N	(mm)	--	--	--	--	--	204	242	280	332	362	408	521	600
	1.4408	(mm)	--	--	--	--	--	204	242	280	332	362	408	521	600
Drainhole with plug		(inch)	G1/4"						G3/8"						
		Standard for EN-JL1040, EN-JS1049 1.0619+N, optional at 1.4408													
Weights															
standard		(kg)	7	8,5	10	14	20	28	40	53	80	125	165	280	430
optional: Bellows design		(kg)	7,5	9,5	11,5	16	22,5	32	47	59	993	140	180	310	470
Flanges															
ØD1	PN16	(mm)	95	105	115	140	150	165	185	200	220	250	285	--	--
	PN25	(mm)	--	--	--	--	--	--	--	--	--	--	--	360	425
	PN40	(mm)	95	105	115	140	150	165	185	200	235	270	300	375	450
ØD2	PN10	(mm)	--	--	--	--	--	--	--	--	--	--	--	445	505
	PN16	(mm)	115	140	150	165	185	200	220	250	285	340	405	460	520
b1	EN-JL1040	(mm)	--	16	16	18	18	20	20	22	24	26	26	--	--
	EN-JS1049	(mm)	--	18	18	18	19	20	22	24	24	27	29	37	40
	1.0619+N	(mm)	16	20	20	20	21	22	24	26	28	31	34	37	40
	1.4408	(mm)	16	16	16	18	19	20	22	22	23	26	28	37	40
b2	EN-JL1040	(mm)	--	18	18	20	20	22	24	26	26	30	32	--	--
	EN-JS1049	(mm)	--	19	19	20	20	20	20	22	22	31	33	33	35
	1.0619+N	(mm)	18	19	19	20	20	20	20	22	22	27	29	33	35
	1.4408	(mm)	18	15	16	17	17	17	17	19	19	24	26	33	35
Flanges acc. to DIN EN 1092-1 / -2, Flangeholes/-thickness tolerances acc. to DIN 2533 / 2543 / 2545 / 28605 / 28607, raised face, facing acc. to DIN 2526 form C															

Standard-Flangeholes																	
DN			15	20	25	32	40	50	65	80	100	125	150	200	250	300	350
ØK	PN10 DIN 2532	(mm)	--	--	--	--	--	--	--	--	--	--	--	--	--	400	460
n x Ød		(mm)	--	--	--	--	--	--	--	--	--	--	--	--	--	12x22	16x22
ØK	PN16 DIN 2533	(mm)	65	75	85	100	110	125	145	160	180	210	240	295	355	410	470
n x Ød		(mm)	4x14	4x14	4x14	4x18	4x18	4x18	4x18 [1]	8x18	8x18	8x18	8x22	12x22	12x26	12x26	16x26
ØK	PN25 DIN 2533	(mm)	--	--	--	--	--	--	--	--	--	--	--	310	370	--	--
n x Ød		(mm)	--	--	--	--	--	--	--	--	--	--	--	12x26	12x30	--	--
ØK	PN40 DIN 2545	(mm)	65	75	85	100	110	125	145	160	190	220	250	320	385	--	--
n x Ød		(mm)	4x14	4x14	4x14	4x18	4x18	4x18	8x18	8x18	8x22	8x26	8x26	12x30	12x33	--	--
[1] also with 8 bore holes acc. to DIN EN 1092-1/-2 possible.																	

Pressure-temperature-ratings	Intermediate values for max. permissible operational pressures can be determined by linear interpolation of the given temperature / pressure chart.

acc. to DIN EN 1092-2			-60°C to <-10°C [1]	-10°C to 120°C	150°C	200°C	250°C	300°C	350°C	400°C	450°C
EN-JL1040	16	(bar)	--	16	14,4	12,8	11,2	9,6	--	--	--
EN-JS1049	25	(bar)	on request	25	24,3	23	21,8	20	17,5	--	--
EN-JS1049	40	(bar)	on request	40	38,8	36,8	34,8	32	28	--	--

acc. to manufacturers standard			-60°C to <-10°C [1]	-10°C to 120°C	150°C	200°C	250°C	300°C	350°C	400°C	450°C
1.0619+N	25	(bar)	18,7	25	23,9	22	20	17,2	16	14,8	8,2
1.0619+N	40	(bar)	30	40	38,1	35	32	28	25,7	23,8	13,1

acc. to DIN EN 1092-1			-60°C to <-10°C [1]	-10°C to 100°C	150°C	200°C	250°C	300°C	350°C	400°C	450°C
1.4408	40	(bar)	40	40	36,3	33,7	31,8	29,7	28,5	27,4	--

[1] Studs and nuts made of A4-70 (at temperatures below -10°C)

Certified coefficient of discharge Kdr (Values for D/G variable: DN15-100; 250 < 3,5 bar, DN125-200 < 4,0 bar)													
DN1 / DN2	15 / 25	20 / 32	25 / 40	32 / 50	40 / 65	50 / 80	65 / 100	80 / 125	100 / 150	125 / 200	150 / 250	200 / 300	250 / 350
TÜV · SV · . . -663 · D/G	0,74									0,7		0,75	0,7
TÜV · SV · . . -663 · F	0,52	0,54					0,48			0,45		0,56	0,52

Capacity saturated steam (incl. 10% overpressure)

DN1 / DN2			15 / 25	20 / 32	25 / 40	32 / 50	40 / 65	50 / 80	65 / 100	80 / 125	100 / 150	125 / 200	150 / 250	200 / 300	250 / 350
Set pressure			Saturated steam (kg/h)												
	0,2	(barg)	42	81	126	210	324	506	855	1295	2024	2510	3490	6937	8931
	0,4	(barg)	60	120	185	307	473	739	1250	1890	2960	3630	5050	9694	12615
	0,5	(barg)	67	132	207	344	529	827	1400	2120	3310	4070	5660	10859	14204
	0,6	(barg)	74	147	230	383	590	923	1560	2360	3690	4470	6220	11934	15698
	0,8	(barg)	87	174	272	453	698	1090	1840	2790	4360	5240	7280	13901	18492
	1	(barg)	100	203	317	526	811	1270	2140	3245	5070	6030	8385	15868	21306
	1,5	(barg)	133	272	425	707	1090	1700	2875	4355	6800	8050	11200	20739	28637
	2	(barg)	164	305	477	792	1220	1900	3220	4880	7625	10125	14080	25647	36333
	2,5	(barg)	194	366	572	950	1460	2285	3865	5855	9145	11990	16660	30689	43601
	3	(barg)	224	424	662	1100	1695	2645	4475	6775	10600	13880	19300	35874	50185
	4	(barg)	280	535	837	1390	2140	3350	5650	8570	13400	17550	24400	45676	62689
	5	(barg)	335	640	1000	1665	2565	4000	6770	10260	16000	21000	29250	54723	75043
	6	(barg)	390	745	1165	1940	2990	4665	7890	11950	18650	24500	34050	63698	87350
	7	(barg)	445	850	1330	2210	3400	5320	9000	13600	21300	27900	38800	72658	99638
	8	(barg)	500	957	1495	2485	3820	5980	10100	15300	23900	31350	43600	81599	111898
	9	(barg)	554	1060	1660	2755	4245	6630	11200	16950	26500	34800	48400	90525	124139
	10	(barg)	609	1165	1820	3025	4665	7290	12300	18650	29150	38250	53200	99452	136381
	11	(barg)	664	1270	1985	3300	5080	7940	13400	20300	31750	41600	58000	108370	148610
	12	(barg)	718	1375	2150	3570	5500	8590	14500	22000	34350	45100	62700	117282	160831
	13	(barg)	773	1480	2310	3840	5920	9250	15600	23650	37000	48500	67500	126197	173057
	14	(barg)	827	1580	2475	4110	6340	9900	16700	25350	39600	52000	72300	135113	185284
	15	(barg)	882	1690	2640	4385	6760	10550	17800	27000	42200	55400	77000	144035	197518
	16	(barg)	936	1790	2800	4655	7170	11200	18950	28700	44800	58800	81800	152960	209758
	17	(barg)	991	1900	2965	4930	7590	11850	20050	30350	47400	62200	86600	161889	222002
	18	(barg)	1046	2000	3130	5200	8010	12500	21150	32050	50100	65700	91400	170826	234257
	19	(barg)	1101	2100	3295	5470	8430	13150	22250	33700	52700	69100	96200	179777	246532
	20	(barg)	1156	2210	3460	5750	8850	13800	23350	35400	55300	72600	101000	188724	258800
	21	(barg)	1210	2320	3620	6020	9250	14500	24500	37100	57900	76000	105800	197693	
	22	(barg)	1265	2420	3790	6290	9700	15150	25600	38800	60600	79500	110900	206658	
	24	(barg)	1375	2635	4120	6840	10500	16450	27850	42100	65900	86500	120600	224640	
	25	(barg)	1431	2740	4280	7120	10950	17100	28950	43800		90200	125500	233648	
	26	(barg)	1486	2850	4450	7390	11350	17800	30050			93700	130300		
	27	(barg)	1541	2950	4620	7670	11820	18460	31220			96950			
	28	(barg)	1597	3060	4780	7950	12250	19100	32300						
	30	(barg)	1708	3270	5120	8500	13100	20450	34550						
← max. set pressure stainless steel version	32	(barg)	1819	3490	5450	9060	13950	21800	36800						
	34	(barg)													
	40	(barg)													

Capacity air (incl. 10% overpressure)

DN1 / DN2			15 / 25	20 / 32	25 / 40	32 / 50	40 / 65	50 / 80	65 / 100	80 / 125	100 / 150	125 / 200	150 / 250	200 / 300	250 / 350
Set pressure			Air 0°C and 1,013 bara (Nm^3/h)												
	0,2	(barg)	49	95	148	246	380	594	1003	1520	2375	2945	4100	8150	10398
	0,4	(barg)	72	143	223	370	570	891	1505	2280	3565	4380	6090	11695	15219
	0,5	(barg)	82	161	252	419	646	1009	1705	2585	4035	4970	6910	13256	17340
	0,6	(barg)	91	182	284	472	728	1135	1920	2910	4545	5520	7675	14731	19376
	0,8	(barg)	110	218	341	567	873	1365	2305	3490	5460	6555	9115	17428	23182
	1	(barg)	126	255	398	661	1019	1590	2690	4075	6370	7575	10530	19963	26803
	1,5	(barg)	168	344	538	894	1378	2150	3640	5510	8610	10195	14180	26284	36294
	2	(barg)	209	388	607	1008	1550	2425	4100	6210	9700	12890	17920	32693	46314
	2,5	(barg)	248	468	731	1215	1870	2925	4945	7490	11700	15330	21300	39310	55850
	3	(barg)	288	544	850	1410	2175	3400	5750	8700	13600	17840	24800	46140	64547
	4	(barg)	362	692	1080	1800	2770	4330	7310	11080	17300	22725	31600	59135	81161
	5	(barg)	436	834	1300	2160	3330	5210	8800	13340	20840	27350	38000	71211	97653
	6	(barg)	510	975	1520	2530	3900	6090	10300	15600	24370	31900	44400	83238	114146
	7	(barg)	583	1115	1745	2900	4465	6970	11790	17860	27900	36600	50900	95264	130638
	8	(barg)	657	1255	1965	3260	5030	7860	13280	20100	31430	41200	57300	107291	147130
	9	(barg)	730	1395	2185	3630	5590	8740	14770	22370	34960	45800	63800	119318	163623
	10	(barg)	804	1540	2400	3990	6150	9610	16250	24600	38500	50500	70200	131344	180115
	11	(barg)	878	1680	2625	4360	6720	10500	17750	26900	42000	55100	76600	143371	196607
	12	(barg)	951	1820	2845	4730	7290	11380	19240	29150	45500	59700	83100	155398	213099
	13	(barg)	1025	1960	3070	5090	7850	12270	20730	31400	49000	64400	89500	167424	229592
	14	(barg)	1099	2100	3290	5460	8400	13150	22200	33650	52600	69000	96000	179451	246084
	15	(barg)	1173	2245	3500	5830	8980	14030	23700	35900	56100	73600	102400	191477	262576
	16	(barg)	1246	2385	3725	6190	9540	14900	25200	38200	59600	78200	108800	203504	279069
	17	(barg)	1320	2530	3950	6560	10100	15800	26700	40400	63100	82900	115300	215531	295561
	18	(barg)	1394	2670	4170	6920	10670	16650	28100	42700	66700	87500	121700	227557	312053
	19	(barg)	1467	2800	4390	7300	11240	17550	29600	44900	70200	92100	128100	239584	328546
	20	(barg)	1541	2950	4610	7660	11800	18400	31150	47200	73700	96800	134600	251610	345038
	21	(barg)	1614	3090	4830	8020	12370	19300	32650	49400	77300	101400	141000	263637	
	22	(barg)	1688	3230	5050	8390	12930	20200	34150	51700	80800	106000	147500	275664	
	24	(barg)	1835	3515	5490	9120	14060	21970	37100	56200	87900	115300	160400	299717	
	25	(barg)	1909	3655	5710	9490	14620	22850	38600	58500		120000	166900	311743	
	26	(barg)	1983	3800	5930	9850	15190	23730	40100			124600	173300		
	27	(barg)	2057	3930	6160	10240	15770	24630	41650			129350			
	28	(barg)	2130	4080	6370	10600	16320	25500	43100						
	30	(barg)	2277	4360	6810	11320	17450	27250	46100						
	32	(barg)	2425	4640	7250	12050	18570	29000	49100						
	34	(barg)	2572	4925	7700	12790	19700	30800	52050						
↓ max. set pressure stainless steel version	40	(barg)	3014	5770	9030	14477	23810	36100	61000						

Capacity water (incl. 10% overpressure)

DN1 / DN2			15 / 25	20 / 32	25 / 40	32 / 50	40 / 65	50 / 80	65 / 100	80 / 125	100 / 150	125 / 200	150 / 250	200 / 300	250 / 350
Set pressure			Water 20°C (t/h)												
	0,2	(bar)	1,63	3,28	5,13	8,53	13,1	20,5	30,8	46,7	73	94,9	132	286	390
	0,5	(bar)	2,60	5,19	8,12	13,5	20,8	32,5	48,8	73,9	115	150	209	452	616
	1	(bar)	3,68	7,35	11,5	19,1	29,4	45,9	69	104	163	212	295	639	872
	2	(bar)	5,20	10,4	16,2	27	41,6	64,9	97,5	148	231	300	417	903	1233
	3	(bar)	6,38	12,7	19,9	33	50,9	79,5	119	181	283	368	511	1106	1510
	4	(bar)	7,36	14,7	22,9	38,1	58,7	91,8	138	209	326	424	590	1278	1743
	5	(bar)	8,24	16,4	25,7	42,6	65,5	102	154	233	365	474	660	1428	1949
	6	(bar)	9,02	18	28,1	46,7	72	112	169	256	400	520	723	1565	2135
	7	(bar)	9,75	19,4	30,4	50,4	77,7	121	182	276	432	562	781	1690	2306
	8	(bar)	10,41	20,8	32,5	53,9	83,1	130	195	295	461	600	835	1807	2465
	9	(bar)	11,05	22	34,4	57,2	88,1	138	207	313	490	637	885	1917	2615
	10	(bar)	11,64	23,2	36,3	60,3	92,9	145	218	330	516	671	933	2020	2756
	11	(bar)	12,21	24,4	38	63,2	97,4	152	229	346	540	703	977	2119	2891
	12	(bar)	12,76	25,4	39,7	66	102	159	239	362	565	735	1022	2213	3019
	13	(bar)	13,28	26,5	41,4	68,7	106	165	249	376	587	764	1062	2303	3143
	14	(bar)	13,78	27,5	42,9	71,3	110	172	258	391	611	794	1104	2390	3261
	16	(bar)	14,73	29,4	45,9	76,3	117	184	276	418	653	849	1181	2555	3486
	18	(bar)	15,62	31,2	48,7	80,9	125	195	293	443	692	900	1252	2710	3698
	19	(bar)	16,05	32	49,9	82,9	128	200	300	454	710	923	1284	2785	3799
	20	(bar)	16,47	32,8	51,3	85,3	131	205	308	467	730	949	1320	2857	3898
	21	(bar)	16,87	33,7	52,6	87,4	135	210	316	479	748	973	1350	2928	
	24	(bar)	18,04	36	56,2	93,4	144	225	338	512	800	1040	1443	3130	
	25	(bar)	18,41	36,7	57,4	95,3	147	229	345	522		1059	1473	3194	
	26	(bar)	18,78	37,4	58,5	97,2	150	234	352			1080	1502		
	27	(bar)	19,13	38,2	59,6	99	153	238	358			1100			
	28	(bar)	19,49	38,9	60,7	101	155	243	365						
	30	(bar)	20,17	40,2	62,9	104	161	251	375						
	32	(bar)	20,83	41,5	64,8	108	166	259	380						
	34	(bar)	21,47	42,8	66,9	111	171	268	400						
↓ max. set pressure stainless steel version	40	(bar)	23,29	46,4	72,5	124,8	185,4	289,7	435						

ARI-SAFE-SN ANSI (Semi-Nozzle) - Full lift safety valve D/G, Standard safety valve F

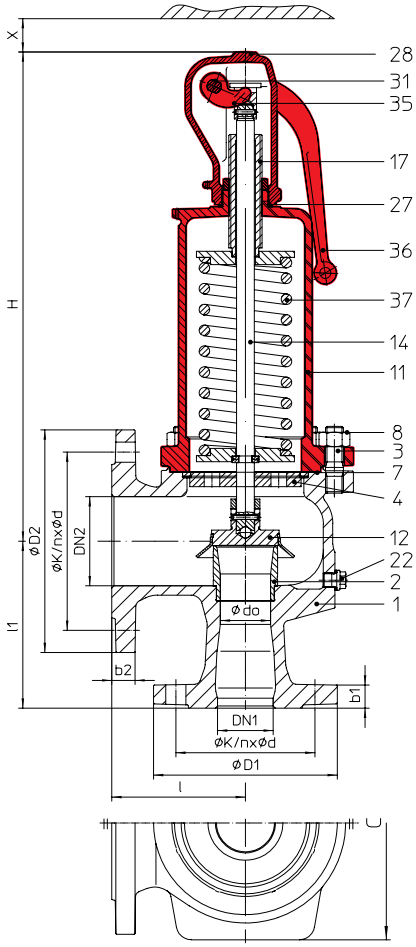

Fig. ... .901
closed lifting device,
closed bonnet

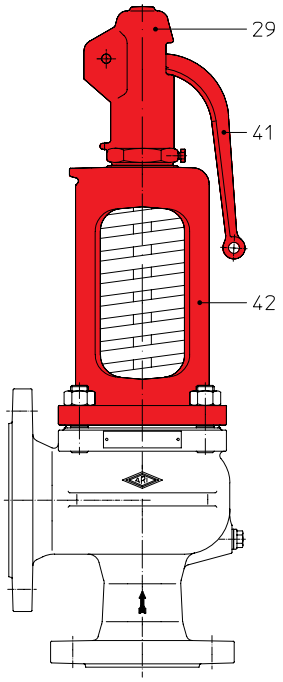

Fig. ... .902
open lifting device,
open bonnet

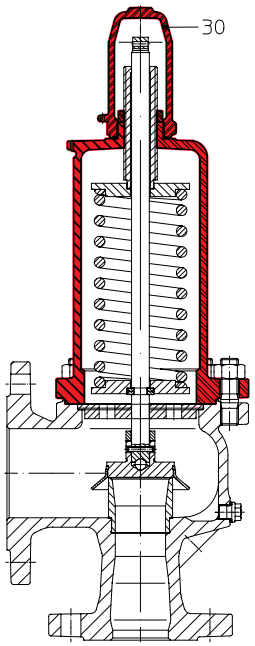

Fig. ... .911
gastight cap,
closed bonnet

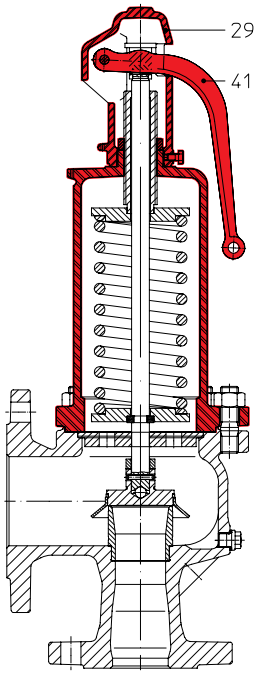

Fig. ... .912
open lifting device,
closed bonnet

Figure	Nominal pressure	Material	Nominal diameter	Temperature range	Flange
32.901 / 902 / 911 / 912	ANSI150/150	SA216 WCB	1" x 2" - 6" x 10"	-29°C to +425°C	ASME B16.5
35.901 / 902 / 911 / 912	ANSI300/150	SA216 WCB	1" x 2" - 6" x 10"	-29°C to +425°C	ASME B16.5
52.901 / 911	ANSI150/150	SA351 CF8M	1" x 2" - 6" x 10"	-60°C to +400°C	ASME B16.5
55.901 / 911	ANSI300/150	SA351 CF8M	1" x 2" - 6" x 10"	-60°C to +400°C	ASME B16.5

Type-test approval		
Full lift safety valve: (acc. to VdTÜV-leaflet 663)	Fig. 901/902/911/912	**TÜV · SV · . . -663 · D/G**
Standard safety valve:	Fig. 901/911	**TÜV · SV · . . -663 · F**
Construction / Application		
Safety valve, spring loaded, direct loaded; steam, gases, vapours and liquids		
Requirement		
acc. to DIN EN ISO 4126-1 / TRD 421 / AD2000-A2		

Sizing	
Calculation acc. to EN ISO 4126-1, TRD 421 and AD-leaflet A2	
Details required	
Medium: Gas	Mass flow (kg/h), molar mass (kg/kmol), temperature (°C), set pressure (bar), back gauge pressure (bar)
Medium: Liquid	Mass flow (kg/h), density (kg/m^3), viscosity, temperature (°C), set pressure (bar), back gauge pressure (bar)
Order data:	
ARI-SAFE-SN ANSI - safety valve, Figure ..., Nominal diameter .../..., ANSI ..., Material ..., Set pressure ... bar	

	standard: without metal bellows	**1" x 2" - 6" x 10" optional: with metal bellows** (refer to page 42)
Superimposed back pressure	no backpressure allowed	on request
Built up back pressure	max. 10% from set pressure (gauge) (higher on request)	on request

Parts				
Pos.	**Sp.p.**	**Description**	**Fig. 32.901/902/911/912; 35.901/902/911/912**	**Fig. 52.901/911; 55.901/911**
1		Body	SA216 WCB	SA351 CF8M
2		Seat	SA479 Gr.316 Ti	SA479 Gr.316 Ti
3		Studs	SA193 B7	SA193 B8
4	x	Spindle guide	NPS ≤ 2": SA276 Gr.420; NPS > 2": SA395 / SA276 Gr.440	NPS ≤ 2": SA479 Gr.316 Ti; NPS > 2": SA351 CF8M
7	x	Gasket	GRAPHIT (CrNi laminated with graphite)	
8		Hexagon nut	SA194 2H	SA194 8
11		Bonnet, closed	SA395	SA351 CF8M
12	x	Disc	SA276 Gr.440	SA479 Gr.316 Ti
14	x	Spindle	SA276 Gr.420	SA479 Gr.316 Ti
17		Adjusting screw	SA276 Gr.420	SA479 Gr.316 L
22		Plug screw (optional)	SA193-B7	SA193-B8
27	x	Sealing ring	CuFA	SA479 Gr.316 Ti
28		Cap, closed	SA395	SA351 CF8M
29		Cap, open	SA395	--
30		Cap, gastight	SA395	SA351 CF8M
31	x	Packing ring	GRAPHIT	
35		Lift fork	SA395	SA351 CF8M
36		Lever, closed	SA395	SA479 Gr.316 Ti
37	x	Spring	SA401 Gr.9254, SA29 Gr.6150	SA313 Gr.316
41		Lever, open	SA395	--
42		Bonnet, open	SA395	--
43		Bellows (optional)	EPDM 70 Shore A	
55		Stainless steel bellows unit (optional)	SA240 / SA479 Gr.316 Ti	SA240 / SA479 Gr.316 Ti
70		Balanced piston	SA240 Gr.316 Ti	SA479 Gr.316 Ti
	└ Spare parts			

Coefficient of discharge Kdr		**VdTÜV** (Values for D/G variabel: 1" - 4" < 3,5 bar, 6" < 4,0 bar)							
NPS		**1"x2"**	**1 1/2"x2" 1 1/2"x2 1/2"**	**1 1/2"x3"**	**2"x3"**	**3"x4"**	**4"x6"**	**6"x8"**	**6"x10"**
TÜV · SV · . . -663 · D/G	(bar)	0,74						0,70	
TÜV · SV · . . -663 · F	(bar)	0,54				0,48		0,45	

Pressure-temperature-ratings			Intermediate values for max. permissible operational pressures can be determined by linear interpolation of the given temperature / pressure chart.											
acc. to ASME 16.34			**-29°C bis 38°C**	**50°C**	**100°C**	**150°C**	**200°C**	**250°C**	**300°C**	**325°C**	**350°C**	**375°C**	**400°C**	**425°C**
SA216WCB	ANSI150	(bar)	19,6	19,2	17,7	15,8	13,8	12,1	10,2	9,3	8,4	7,4	6,5	5,5
SA216WCB	ANSI300	(bar)	51,1	50,1	46,6	45,1	43,8	41,9	39,8	38,7	37,6	36,4	34,7	38,8
acc. to ASME 16.34			**-60°C bis 38°C**	**50°C**	**100°C**	**150°C**	**200°C**	**250°C**	**300°C**	**325°C**	**350°C**	**375°C**	**400°C**	**425°C**
SA351CF8M	ANSI150	(bar)	19	18,4	16,2	14,8	13,7	12,1	10,2	9,3	8,4	7,4	6,5	--
SA351CF8M	ANSI300	(bar)	49,6	48,1	42,2	38,5	35,7	33,4	31,6	30,9	30,3	29,9	29,4	--

Information / restriction of technical rules need to be observed!
A production permission acc. to TRB 801 No. 45 is available.
The engineer, designing a system or a plant, is responsible for the selection of the correct valve.
Resistance and fitness must be verified (contact manufacturer for information, refer to Product overview and Resistance list).

ARI-SAFE-SN ANSI (Semi-Nozzle-TÜV) 901 / 902 / 911 / 912

Technical data / Spring ranges

NPS		1"x2"	1 1/2"x2"	1 1/2"x2 1/2"	1 1/2"x3"	2"x3"	3"x4"	4"x6"	4"x6"	6"x8"	6"x10"
Center-to-face dimensions acc. to API 526 (dedicated to API-Orifice)											
Bodysize		**D, E**	**F**	**G**	**H**	**J**	**L**	**M**	**P**	**Q**	**R**
l	(mm)	114,3	120,7	120,7	123,8	123,8	165,1	184,2	228,6	241,3	266,7
l1	(mm)	104,8	123,8	123,8	130,2	136,5	155,6	177,8	181	239,7	239,7
Dimensions											
d0	(mm)	22,5	29	29	36	45	58,5	90	90	106	125
A0	(mm²)	398	661	661	1018	1590	2688	6362	6362	8825	12272
H	(mm)	280	330	330	390	435	545	690	690	845	890
H (with stainless steel bellows)	(mm)	335	390	390	445	500	620	808	808	919	953
X	(mm)	150	200	200	250	300	350	500		500	500
C (Width of support tongues)	(mm)	--	--	--	--	204	242	332		362	405
Drainhole with plug	(inch)	G1/4"					G3/8"				
	Optional, not standard										
Weights											
Standard	(kg)	12	18	18	23	30	47	80	82	140	170
Option: stainless steel bellows	(kg)	13,5	20	20	25,5	34	54	90	92	155	185

Standard-flange dimensions											Flanges acc. to ASME / ANSI B16.5
ØD1	ANSI150	(mm)	108	127	127	127	153	191	229	280	280
	ANSI300	(mm)	124	156	156	156	165	210	254	318	318
ØD2	ANSI150	(mm)	153	153	178	191	191	229	280	343	407
b1	ANSI150	(mm)	17,5	20,6	20,6	20,6	22,3	28,6	31,8	36,5	36,5
	ANSI300	(mm)	17,5	20,6	20,6	20,6	22,3	28,6	31,8	36,5	36,5
b2	ANSI150	(mm)	19,1	19,1	22,3	23,8	23,8	23,8	25,4	28,6	30,2

Standard-Flangeholes											
NPS			**1"**	**1 1/2"**	**2"**	**2 1/2"**	**3"**	**4"**	**6"**	**8"**	**10"**
ØK	ANSI150	(mm)	79	98	120,5	140	152,5	190,5	241,5	298,5	362
n x Ød		(mm)	4 x 16	4 x 16	4 x 19	4 x 19	4 x 19	8 x 19	8 x 22	8 x 22	12 x 25
ØK	ANSI300	(mm)	89	114,5	127	--	168	200	270	--	--
n x Ød		(mm)	4 x 19	4 x 22	8 x 19	--	8 x 22	8 x 22	12 x 22	--	--

NPS		1"x2"	1 1/2"x2" 1 1/2"x2 1/2"	1 1/2"x3"	2"x3"	3"x4"	4"x6"	6"x8"	6"x10"
Spring ranges: Standard design									
Full lift safety valve Fig. 901902/911/912	(barü)	0,2 - 0,5					0,2 - 0,5	0,2 - 0,4	0,2 - 0,5
	(barü)	> 0,5 - 1					> 0,5 - 1	> 0,4 - 0,75	> 0,5 - 1
	(barü)	> 1 - 1,5					> 1 - 1,5	> 0,75 - 1,1	> 1 - 1,5
	(barü)	> 1,5 - 2					> 1,5 - 2	> 1,1 - 1,5	> 1,5 - 1,9
	(barü)	> 2 - 2,7					> 2 - 2,5	> 1,5 - 1,9	> 1,9 - 2,3
	(barü)	> 2,7 - 3,6					> 2,5 - 3	> 1,9 - 2,5	> 2,3 - 2,7
	(barü)	> 3,6 - 5					> 3 - 3,6	> 2,5 - 2,95	> 2,7 - 3,3
	(barü)	> 5 - 9					> 3,6 - 5	> 2,95 - 4	> 3,3 - 4,1
	(barü)	> 9 - 16					> 5 - 9	> 4 - 5,7	> 4,1 - 5,5
	(barü)	> 16 - 22					> 9 - 14	> 5,7 - 8,2	> 5,5 - 7,4
	(barü)	> 22 - 28					> 14 - 19	> 8,2 - 12	> 7,4 - 11
	(barü)	> 28 - 34					> 19 - 24	> 12 - 17	> 11 - 16
	(barü)	> 34 - 40						> 17 - 24	> 16 - 21
	(barü)							> 24 - 27	> 21 - 26
Spring ranges: Stainless steel bellows (optional)									
Standard safety valve Fig. 901/911	(barü)	2,5 - 3,3	2,5 - 3,2	2,6 - 3,6	2,8 - 3,4	2,5 - 3,7	2,5 - 3,5	1,1 - 1,5	1,1 - 1,3
	(barü)	> 3,3 - 4,6	> 3,3 - 4	> 3,6 - 4,5	> 3,4 - 4,5	> 3,7 - 4,6	> 3,5 - 4,2	> 1,5 - 2	> 1,3 - 1,7
	(barü)	> 4,6 - 5,4	> 4 - 5,5	> 4,5 - 5,6	> 4,5 - 8,4	> 4,6 - 5,9	> 4,2 - 4,9	> 2 - 2,5	> 1,7 - 2,1
	(barü)	> 5,4 - 7	> 5,5 - 6,4	> 5,6 - 7,5	> 8,4 - 10	> 5,9 - 8	> 4,9 - 5,6	> 2,5 - 2,9	> 2,1 - 2,4
	(barü)	> 7 - 9	> 6,4 - 7,9	> 7,5 - 10	> 10 - 11,5	> 8 - 10	> 5,6 - 7	> 2,9 - 3,5	> 2,4 - 2,8
	(barü)	> 9 - 11,7	> 7,9 - 11,5	> 10 - 12,5	> 11,5 - 16	> 10 - 18	> 7 - 8	> 3,5 - 4,2	> 2,8 - 3,1
	(barü)	> 11,7 - 16	> 11,5 - 18,5	> 12,5 - 16	> 16 - 18,5	> 18 - 24	> 8 - 9,3	> 4,2 - 5,1	> 3,1 - 3,4
	(barü)	> 16 - 22	> 18,5 - 25	> 16 - 22	> 18,5 - 23	> 24 - 26	> 9,3 - 11,5	> 5,1 - 6,5	> 3,4 - 3,9
	(barü)	> 22 - 30					> 11,5 - 14	> 6,5 - 7,5	> 3,9 - 4,8
	(barü)						> 14 - 20	> 7,5 - 9	> 4,8 - 5,8
	(barü)							> 9,0 - 10,5	> 5,8 - 6,8
	(barü)							> 10,5 - 12,6	> 6,8 - 8,1
	(barü)							> 12,6 - 17	> 8,1 - 9,7
	(barü)							> 17 - 25	> 9,7 - 11,3
	(barü)								> 11,3 - 13
	(barü)								> 13 - 15
	(barü)								> 15 - 18

Capacity saturated steam (incl. 10% overpressure)

NPS			1"x2"	1 1/2"x2"	1 1/2"x2 1/2"	1 1/2"x3"	2"x3"	3"x4"	4"x6"	6"x8"	6"x10"
Set pressure			Saturated steam kg/h								
	0,2	(barg)	126	210	210	324	506	855	2024	2510	3490
	0,4	(barg)	185	307	307	473	739	1250	2960	3630	5050
	0,5	(barg)	207	344	344	529	827	1400	3310	4070	5660
	0,6	(barg)	230	383	383	590	923	1560	3690	4470	6220
	0,8	(barg)	272	453	453	698	1090	1840	4360	5240	7280
	1	(barg)	317	526	526	811	1270	2140	5070	6030	8385
	1,5	(barg)	425	707	707	1090	1700	2875	6800	8050	11200
	2	(barg)	477	792	792	1220	1900	3220	7625	10125	14080
	2,5	(barg)	572	950	950	1460	2285	3865	9145	11990	16660
	3	(barg)	662	1100	1100	1695	2645	4475	10600	13880	19300
	4	(barg)	837	1390	1390	2140	3350	5650	13400	17550	24400
	5	(barg)	1000	1665	1665	2565	4000	6770	16000	21000	29250
	6	(barg)	1165	1940	1940	2990	4665	7890	18650	24500	34050
	7	(barg)	1330	2210	2210	3400	5320	9000	21300	27900	38800
	8	(barg)	1495	2485	2485	3820	5980	10100	23900	31350	43600
	9	(barg)	1660	2755	2755	4245	6630	11200	26500	34800	48400
	10	(barg)	1820	3025	3025	4665	7290	12300	29150	38250	53200
	11	(barg)	1985	3300	3300	5080	7940	13400	31750	41600	58000
	12	(barg)	2150	3570	3570	5500	8590	14500	34350	45100	62700
	13	(barg)	2310	3840	3840	5920	9250	15600	37000	48500	67500
	14	(barg)	2475	4110	4110	6340	9900	16700	39600	52000	72300
	15	(barg)	2640	4385	4385	6760	10550	17800	42200	55400	77000
	16	(barg)	2800	4655	4655	7170	11200	18950	44800	58800	81800
	17	(barg)	2965	4930	4930	7590	11850	20050	47400	62200	86600
	18	(barg)	3130	5200	5200	8010	12500	21150	50100	65700	91400
	19	(barg)	3295	5470	5470	8430	13150	22250	52700	69100	96200
	20	(barg)	3460	5750	5750	8850	13800	23350	55300	72600	101000
	21	(barg)	3620	6020	6020	9250	14500	24500	57900	76000	105800
	22	(barg)	3790	6290	6290	9700	15150	25600	60600	79500	110900
	24	(barg)	4120	6840	6840	10500	16450	27850	65900	86500	120600
	25	(barg)	4280	7120	7120	10950	17100	28950		90200	125500
	26	(barg)	4450	7390	7390	11350	17800	30050		93700	130300
	27	(barü)	4620	7670	7670	11820	18460	31220		96950	
	28	(barg)	4780	7950	7950	12250	19100	32300			
← max. set pressure stainless steel version	30	(barg)	5120	8500	8500	13100	20450	34550			
	32	(barg)	5450	9060	9060	13950	21800	36800			
	34	(barg)	5800	9650	9650	14850	23250	39100			
	40	(barg)									

ARI-SAFE-SN ANSI (Semi-Nozzle-TÜV) 901 / 902 / 911 / 912

Capacity: Air

Capacity air (incl. 10% overpressure)

NPS			1"x2"	1 1/2"x2"	1 1/2"x2 1/2"	1 1/2"x3"	2"x3"	3"x4"	4"x6"	6"x8"	6"x10"
Set pressure			Air in Nm^3/h (0°C; 1,013 bara)								
	0,2	(barg)	148	246	246	380	594	1003	2375	2945	4100
	0,4	(barg)	223	370	370	570	891	1505	3565	4380	6090
	0,5	(barg)	252	419	419	646	1009	1705	4035	4970	6910
	0,6	(barg)	284	472	472	728	1135	1920	4545	5520	7675
	0,8	(barg)	341	567	567	873	1365	2305	5460	6555	9115
	1	(barg)	398	661	661	1019	1590	2690	6370	7575	10530
	1,5	(barg)	538	894	894	1378	2150	3640	8610	10195	14180
	2	(barg)	607	1008	1008	1550	2425	4100	9700	12890	17920
	2,5	(barg)	731	1215	1215	1870	2925	4945	11700	15330	21300
	3	(barg)	850	1410	1410	2175	3400	5750	13600	17840	24800
	4	(barg)	1080	1800	1800	2770	4330	7310	17300	22725	31600
	5	(barg)	1300	2160	2160	3330	5210	8800	20840	27350	38000
	6	(barg)	1520	2530	2530	3900	6090	10300	24370	31900	44400
	7	(barg)	1745	2900	2900	4465	6970	11790	27900	36600	50900
	8	(barg)	1965	3260	3260	5030	7860	13280	31430	41200	57300
	9	(barg)	2185	3630	3630	5590	8740	14770	34960	45800	63800
	10	(barg)	2400	3990	3990	6150	9610	16250	38500	50500	70200
	11	(barg)	2625	4360	4360	6720	10500	17750	42000	55100	76600
	12	(barg)	2845	4730	4730	7290	11380	19240	45500	59700	83100
	13	(barg)	3070	5090	5090	7850	12270	20730	49000	64400	89500
	14	(barg)	3290	5460	5460	8400	13150	22200	52600	69000	96000
	15	(barg)	3500	5830	5830	8980	14030	23700	56100	73600	102400
	16	(barg)	3725	6190	6190	9540	14900	25200	59600	78200	108800
	17	(barg)	3950	6560	6560	10100	15800	26700	63100	82900	115300
	18	(barg)	4170	6920	6920	10670	16650	28100	66700	87500	121700
	19	(barg)	4390	7300	7300	11240	17550	29600	70200	92100	128100
	20	(barg)	4610	7660	7660	11800	18400	31150	73700	96800	134600
	21	(barg)	4830	8020	8020	12370	19300	32650	77300	101400	141000
	22	(barg)	5050	8390	8390	12930	20200	34150	80800	106000	147500
	24	(barg)	5490	9120	9120	14060	21970	37100	87900	115300	160400
	25	(barg)	5710	9490	9490	14620	22850	38600		120000	166900
	26	(barg)	5930	9850	9850	15190	23730	40100		124600	173300
	27	(barü)	6160	10240	10240	15770	24630	41650		129350	
	28	(barg)	6370	10600	10600	16320	25500	43100			
↓ max. set pressure stainless steel version	30	(barg)	6810	11320	11320	17450	27250	46100			
	32	(barg)	7250	12050	12050	18570	29000	49100			
	34	(barg)	7700	12790	12790	19700	30800	52050			
	40	(barg)	9030	14477	14477	23810	36100	61000			

Capacity water (incl. 10% overpressure)

NPS			1"x2"	1 1/2"x2"	1 1/2"x2 1/2"	1 1/2"x3"	2"x3"	3"x4"	4"x6"	6"x8"	6"x10"
Set pressure			Water m^3/h								
	0,2	(barg)	5,13	8,53	8,53	13,1	20,5	30,8	73	94,9	132
	0,5	(barg)	8,12	13,5	13,5	20,8	32,5	48,8	115	150	209
	1	(barg)	11,5	19,1	19,1	29,4	45,9	69	163	212	295
	2	(barg)	16,2	27	27	41,6	64,9	97,5	231	300	417
	3	(barg)	19,9	33	33	50,9	79,5	119	283	368	511
	4	(barg)	22,9	38,1	38,1	58,7	91,8	138	326	424	590
	5	(barg)	25,7	42,6	42,6	65,5	102	154	365	474	660
	6	(barg)	28,1	46,7	46,7	72	112	169	400	520	723
	7	(barg)	30,4	50,4	50,4	77,7	121	182	432	562	781
	8	(barg)	32,5	53,9	53,9	83,1	130	195	461	600	835
	9	(barg)	34,4	57,2	57,2	88,1	138	207	490	637	885
	10	(barg)	36,3	60,3	60,3	92,9	145	218	516	671	933
	11	(barg)	38	63,2	63,2	97,4	152	229	540	703	977
	12	(barg)	39,7	66	66	102	159	239	565	735	1022
	13	(barg)	41,4	68,7	68,7	106	165	249	587	764	1062
	14	(barg)	42,9	71,3	71,3	110	172	258	611	794	1104
	16	(barg)	45,9	76,3	76,3	117	184	276	653	849	1181
	18	(barg)	48,7	80,9	80,9	125	195	293	692	900	1252
	19	(barg)	49,9	82,9	82,9	128	200	300	710	923	1284
	20	(barg)	51,3	85,3	85,3	131	205	308	730	949	1320
	21	(barg)	52,6	87,4	87,4	135	210	316	748	973	1350
	24	(barg)	56,2	93,4	93,4	144	225	338	800	1040	1443
	25	(barg)	57,4	95,3	95,3	147	229	345		1059	1473
	26	(barg)	58,5	97,2	97,2	150	234	352		1080	1502
	27	(barg)	59,6	99	99	153	238	358		1100	
	28	(barg)	60,7	101	101	155	243	365			
↓ max. set pressure stainless steel version	30	(barg)	62,9	104	104	161	251	375			
	32	(barg)	64,8	108	108	166	259	390			
	34	(barg)	66,9	111	111	171	268	400			
	40	(barü)	72,5	124,8	124,8	185,4	289,7	435			

ARI-SAFE - Heating-safety valve

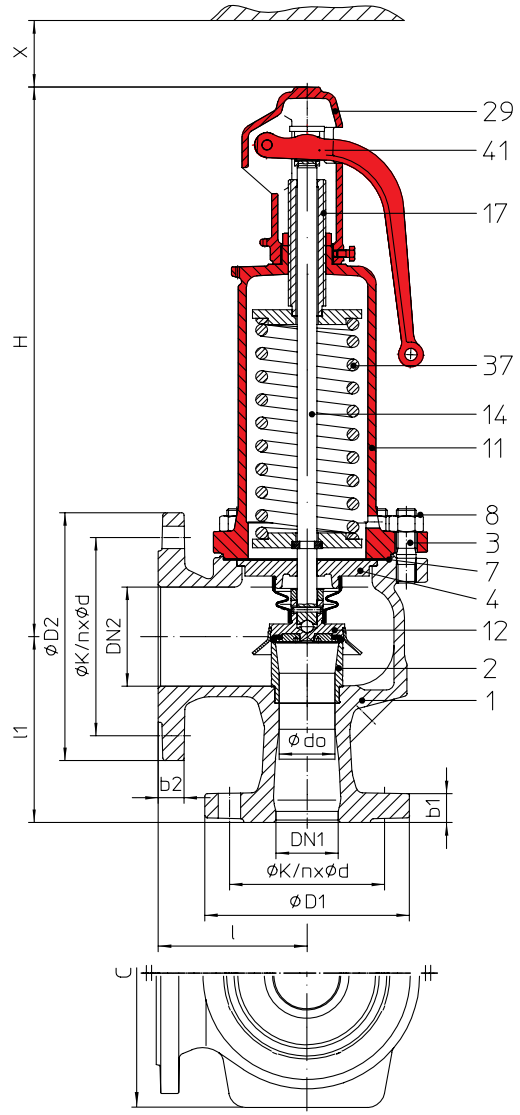

Fig. ... .903

open lifting device, closed bonnet

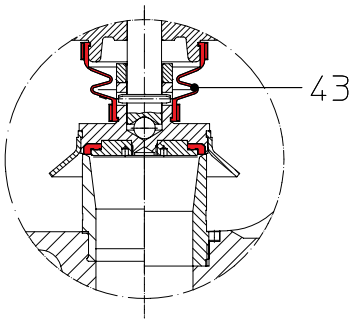

(Construction DN 20-100) (Construction DN125-150)

EPDM-disc, soft seal insert; EPDM-bellows

Figure	Nominal pressure	Material	Nominal diameter	Temperature range	Flange	Flangeholes / -thickness tolerances
12.903 (max. 10 bar)	PN16/16	EN-JL1040	DN20/32 - 150/250	-10°C to +120°C	DIN EN 1092-2	DIN 2533/2533
25.903	PN40/16	EN-JS1049	DN20/32 - 150/250	-10°C to +120°C	DIN EN 1092-2	DIN 2535/2533
35.903	PN40/16	1.0619+N	DN20/32 - 150/250	-10°C to +120°C	DIN EN 1092-1	DIN 2545/2543

Construction		
Standard safety valve, spring loaded, direct loaded metal seat with EPDM insert, EPDM-bellows, closed spring bonnet with control hole, open lifting device, stainless steel seat and spindle		
Application		
Acc. to DIN EN 12828 Heating systems in buildings		
Requirement		
acc. to DIN EN ISO 4126-1 / TRD 721 Part 6, material selection observe TRD! **• Fig. 12.903 (EN-JL1040) max. 10 bar** **• > 10 bar Fig. 25.903 (EN-JS1049) or Fig. 35.903 (1.0619+N)**		
Type-test approval		
Spring loaded:	Fig. 903	TÜV · SV · . . -688 · D/G/H

Sizing
acc. to TRD Part 6.2.5 (see capacity-tables Figure 903)
Order data:
ARI-SAFE-spring loaded, Figure ..., DN .../..., PN ..., Material ..., Set pressure ...barg

Parts					
Pos.	**Sp.p.**	**Description**	**Fig. 12.903**	**Fig. 25.903**	**Fig. 35.903**
1		Body	EN-GJL-250 , EN-JL1040	EN-GJS-400-18U-LT, EN-JS1049	GP240GH+N, 1.0619+N
2		Seat	X20Cr13+QT, 1.4021+QT	X6CrNiMoTi17-12-2, 1.4571	
3		Studs	25CrMo4, 1.7218		
4		Spindle guide	X20Cr13+QT, 1.4021+QT		
7	x	Gasket	Pure graphite (CrNi laminated with graphite)		
8		Hexagon nut	C35E, 1.1181		
11		Bonnet, closed	EN-GJL-250 , EN-JL1040	EN-GJS-400-18U-LT, EN-JS1049	
12		Disc	X20Cr13+QT, 1.4021+QT / EPDM		
14	x	Spindle	X20Cr13+QT, 1.4021+QT		
17		Adjusting screw	X20Cr13+QT, 1.4021+QT	X14CrMoS17+QT, 1.4104+QT	
29		Cap, open	EN-GJS-400-15, EN-JS1030		
37	x	Compression spring	FDSiCr / 51CrV4, 1.8159		
41		Lever, open	EN-GJS-400-15, EN-JS1030		
43		Bellows	EPDM 70 Shore A		
	└ Spare parts				

DN1 / DN 2		**20 / 32**	**25 / 40**	**32 / 50**	**40 / 65**	**50 / 80**	**65 / 100**	**80 / 125**	**100 / 150**	**125 / 200**	**150 / 250**
Spring ranges: Standard design											
Spring loaded **Fig. 903**	(barü)	0,2 - 0,5	> 0,2 - 0,5				0,2 - 0,5	0,2 - 0,5	0,2 - 0,5	0,2 - 0,4	0,2 - 0,5
	(barü)	> 0,5 - 1	> 0,5 - 1				> 0,5 - 1	> 0,5 - 1	> 0,5 - 1	> 0,4 - 0,75	0,5 - 1
	(barü)	> 1 - 1,5	> 1 - 1,5				> 1 - 1,5	> 1 - 1,5	> 1 - 1,5	> 0,75 - 1,1	1 - 1,5
	(barü)	> 1,5 - 2,5	> 1,5 - 2				> 1,5 - 2	> 1,5 - 2	> 1,5 - 2	> 1,11 - 1,5	1,5 - 1,9
	(barü)	> 2,5 - 4,5	> 2 - 2,7				> 2 - 2,7	> 2 - 2,7	> 2 - 2,5	> 1,5 - 1,9	1,9 - 2,3
	(barü)	> 4,5 - 8,5	> 2,7 - 3,6				> 2,7 - 3,6	> 2,7 - 3,6	> 2,5 - 3	> 1,9 - 2,5	2,3 - 2,7
	(barü)	> 8,5 - 19 [1)]	> 3,6 - 5				> 3,6 - 5	> 3,6 - 5	> 3 - 3,6	> 2,5 - 2,95	2,7 - 3,3
	(barü)	> 19 - 28	> 5 - 9				> 5 - 9	> 5 - 9	> 3,6 - 5	> 2,95 - 4	3,3 - 4,1
	(barü)	> 28 - 35	> 9 - 16 [1)]				> 9 - 16 [1)]	> 9 - 14 [1)]	> 5 - 9	> 4 - 5,7	4,1 - 5,5
	(barü)	> 35 - 40	> 16 - 22				> 16 - 22	> 14 - 19	> 9 - 14 [1)]	> 5,7 - 8,2	5,5 - 7,4
	(barü)		> 22 - 28				> 22 - 28	> 19 - 25	> 14 - 19	> 8,2 - 12 [1)]	7,4 - 11 [1)]
	(barü)		> 28 - 34						> 19 - 24	> 12 - 17	11 - 16
	(barü)									> 17 - 24	16 - 21
	(barü)									> 24 - 27	21 - 26

[1)] **Fig. 12.903 max. 10 bar; > 10 bar 25.903 or 35.903**

Information / restriction of technical rules need to be observed!
ARI-Valves of EN-JL1040 are not allowed to be operated in systems acc. to TRD 110.
The engineer, designing a system or a plant, is responsible for the selection of the correct valve.
Resistance and fitness must be verified (contact manufacturer for information, refer to Product overview and Resistance list).

DN1 / DN 2			20 / 32	25 / 40	32 / 50	40 / 65	50 / 80	65 / 100	80 / 125	100 / 150	125 / 200	150 / 250
Dimensions												
d0		(mm)	18	22,5	29	36	45	58,5	72	90	106	125
A0		(mm^2)	254	398	661	1018	1590	2688	4072	6362	8825	12272
l		(mm)	85	100	110	115	120	140	160	180	200	225
l1		(mm)	95	105	115	140	150	170	195	220	250	285
H		(mm)	270	280	330	390	435	545	610	690	845	890
X		(mm)	150	150	200	250	300	350	400	500	500	500
C (Width support tongues)	EN-JL1040	(mm)	--	--	--	--	--	--	280	332	362	408
	EN-JS1049	(mm)	--	--	--	--	--	--	280	332	362	408
	1.0619+N	(mm)	--	--	--	--	204	242	280	332	362	408
Drainhole with plug (optional)		(inch)	G1/4"					G3/8"				
Weights												
standard		(kg)	8,5	9,5	13,5	20	26	39	53	82	125	165
Flanges												
ØD1	PN16	(mm)	105	115	140	150	165	185	200	220	250	285
	PN40	(mm)								235	270	300
ØD2	PN16	(mm)	140	150	165	185	200	220	250	285	340	405
b1	EN-JL1040	(mm)	16	16	18	18	20	20	22	24	26	26
	EN-JS1049	(mm)	18	18	18	19	20	22	24	24	27	29
	1.0619+N	(mm)	20	20	20	21	22	24	26	28	31	34
b2	EN-JL1040	(mm)	18	18	20	20	22	24	26	26	30	32
	EN-JS1049	(mm)	19	19	20	20	20	20	22	22	31	33
	1.0619+N	(mm)	19	19	20	20	20	20	22	22	27	29

Flanges acc. to DIN EN 1092-1 / -2, Flangeholes/-thickness tolerances acc. to DIN 2533 / 2543 / 2545 / 28605 / 28607, raised face, facing acc. to DIN 2526 form C

Standard-Flangeholes														
DN			20	25	32	40	50	65	80	100	125	150	200	250
ØK	PN16 DIN 2533	(mm)	75	85	100	110	125	145	160	180	210	240	295	355
n x Ød		(mm)	4x14	4x14	4x18	4x18	4x18	4x18 [1]	8x18	8x18	8x18	8x22	12x22	12x26
ØK	PN40 DIN 2545	(mm)	75	85	100	110	125	145	160	190	220	250	--	--
n x Ød		(mm)	4x14	4x14	4x18	4x18	4x18	8x18	8x18	8x22	8x26	8x26	--	--

[1] also with 8 bore holes acc. to DIN EN 1092-1/-2 possible.

Pressure-temperature-ratings	Intermediate values for max. permissible operational pressures can be determined by linear interpolation of the given temperature / pressure chart.

acc. to DIN EN 1092-2			-60°C to <-10°C [1]	-10°C to 120°C	150°C	200°C	250°C	300°C	350°C	400°C	450°C
EN-JL1040	16	(bar)	--	16	14,4	12,8	11,2	9,6	--	--	--
EN-JS1049	40	(bar)	on request	40	38,8	36,8	34,8	32	28	--	--

acc. to manufacturers standard			-60°C to <-10°C [1]	-10°C to 120°C	150°C	200°C	250°C	300°C	350°C	400°C	450°C
1.0619+N	40	(bar)	30	40	38,1	35	32	28	25,7	23,8	13,1

[1] Studs and nuts made of A4-70 (at temperatures below -10°C)

Capacity water (incl. 10% overpressure)

Sizing safety valves for the volume flow of water expansion (DIN 4751 T2 - item 8.1 / DIN EN 12828 - item E.3)

Set pressure				**DN1 (inlet) / DN2 (outlet)**	
				20 / 32	**25 / 40**
1	(barg)	Water 20°C (kg/h)	(kg/h)	7300	11500
2	(barg)		(kg/h)	10400	16000
3	(barg)		(kg/h)	12700	20000
4	(barg)		(kg/h)	14700	23000
5	(barg)		(kg/h)	16400	25500
6	(barg)		(kg/h)	18000	28000
7	(barg)		(kg/h)	19400	30500
8	(barg)		(kg/h)	21000	32500
9	(barg)		(kg/h)	22000	34500
10	(barg)		(kg/h)	23000	36500
11	(barg)		(kg/h)	24500	38000
12	(barg)		(kg/h)	25500	40000
13	(barg)		(kg/h)	26500	41500
14	(barg)		(kg/h)	27500	42500
15	(barg)		(kg/h)	28000	44000
16	(barg)		(kg/h)	29500	46000

Sizing: 1 l/h ≙ 1 kW

Capacity saturated steam incl. 10% overpressure

Calculated acc. to TRD 721 Part 6 and AD2000-A2

Set pressure				DN1 (inlet) / DN2 (outlet)									
				20 / 32	25 / 40	32 / 50	40 / 65	50 / 80	65 / 100	80 / 125	100 / 150	125 / 200	150 / 250
1	barg	Saturated steam (kg/h) / **Heating capacity** (kW)	(kg/h)	203	317	526	811	1270	2140	3245	5070	6030	8385
			(kW)	**124**	**193**	**321**	**495**	**774**	**1310**	**1980**	**3095**	**3680**	**5120**
1,5	barg		(kg/h)	272	425	707	1090	1700	2875	4355	6800	8050	11200
			(kW)	**164**	**257**	**427**	**658**	**1030**	**1740**	**2630**	**4110**	**4870**	**6770**
2	barg		(kg/h)	305	477	792	1220	1900	3220	4880	7625	10125	14080
			(kW)	**183**	**285**	**474**	**731**	**1140**	**1930**	**2920**	**4570**	**6060**	**8430**
2,5	barg		(kg/h)	366	572	950	1460	2285	3865	5855	9145	11990	16660
			(kW)	**217**	**340**	**565**	**870**	**1360**	**2300**	**3480**	**5440**	**7120**	**9900**
3	barg		(kg/h)	424	662	1100	1695	2645	4475	6775	10600	13880	19300
			(kW)	**250**	**391**	**649**	**1000**	**1560**	**2640**	**4000**	**6250**	**8190**	**11400**
3,5	barg		(kg/h)	482	754	1250	1930	3015	5100	7720	12050	15600	21700
			(kW)	**283**	**442**	**735**	**1130**	**1770**	**2990**	**4530**	**7070**	**9150**	**12700**
4	barg		(kg/h)	535	837	1390	2140	3350	5650	8570	13400	17550	24400
			(kW)	**312**	**488**	**810**	**1250**	**1950**	**3300**	**5000**	**7800**	**10200**	**14200**
4,5	barg		(kg/h)	588	920	1530	2355	3680	6215	9410	14710	19300	26850
			(kW)	**341**	**533**	**885**	**1360**	**2130**	**3600**	**5460**	**8520**	**11100**	**15600**
5	barg		(kg/h)	640	1000	1665	2565	4000	6770	10260	16000	21000	29250
			(kW)	**370**	**578**	**960**	**1480**	**2310**	**3900**	**5910**	**9240**	**12100**	**16900**
5,5	barg		(kg/h)	694	1085	1800	2775	4340	7330	11100	17350	22770	31660
			(kW)	**398**	**622**	**1030**	**1590**	**2490**	**4200**	**6370**	**9950**	**13000**	**18200**
6	barg		(kg/h)	745	1165	1940	2990	4665	7890	11950	18650	24500	34050
			(kW)	**426**	**666**	**1100**	**1700**	**2660**	**4500**	**6820**	**10600**	**14000**	**19400**
6,5	barg		(kg/h)	800	1250	2075	3200	4995	8440	12790	20000	26220	36450
			(kW)	**454**	**709**	**1180**	**1810**	**2840**	**4790**	**7260**	**11300**	**14900**	**20700**
7	barg		(kg/h)	850	1330	2210	3400	5320	9000	13600	21300	27900	38800
			(kW)	**481**	**752**	**1250**	**1930**	**3000**	**5080**	**7700**	**12000**	**15800**	**22000**
7,5	barg		(kg/h)	904	1415	2345	3615	5650	9550	14470	22600	29660	41250
			(kW)	**509**	**795**	**1320**	**2030**	**3180**	**5370**	**8140**	**12700**	**16700**	**23200**
8	barg		(kg/h)	957	1495	2485	3820	5980	10100	15300	23900	31350	43600
			(kW)	**536**	**837**	**1390**	**2140**	**3350**	**5660**	**8580**	**13400**	**17600**	**24500**
9	barg		(kg/h)	1060	1660	2755	4245	6630	11200	16950	26500	34800	48400
			(kW)	**590**	**921**	**1530**	**2360**	**3685**	**6230**	**9435**	**14740**	**19340**	**26900**
10	barg		(kg/h)	1165	1820	3025	4665	7290	12300	18650	29150	38250	53200
			(kW)	**643**	**1000**	**1670**	**2570**	**4010**	**6790**	**10300**	**16000**	**21100**	**29300**
11	barg		(kg/h)	1270	1985	3300	5080	7940	13400	20300	31750	41600	58000
			(kW)	**695**	**1085**	**1800**	**2780**	**4340**	**7340**	**11100**	**17400**	**22800**	**31700**
12	barg		(kg/h)	1375	2150	3570	5500	8590	14500	22000	34350	45100	62700
			(kW)	**745**	**1165**	**1940**	**2990**	**4670**	**7890**	**12000**	**18700**	**24500**	**34000**
13	barg		(kg/h)	1480	2310	3840	5920	9250	15600	23650	37000	48500	67500
			(kW)	**798**	**1250**	**2070**	**3190**	**4990**	**8430**	**12800**	**20000**	**26200**	**36400**
14	barg		(kg/h)	1580	2475	4110	6340	9900	16700	25350	39600	52000	72300
			(kW)	**850**	**1325**	**2200**	**3390**	**5300**	**8970**	**13600**	**21200**	**27900**	**38700**
15	barg		(kg/h)	1690	2640	4385	6760	10550	17800	27000	42200	55400	77000
			(kW)	**900**	**1405**	**2330**	**3590**	**5620**	**9500**	**14400**	**22500**	**29500**	**41000**
16	barg		(kg/h)	1790	2800	4655	7170	11200	18950	28700	44800	58800	81800
			(kW)	**950**	**1480**	**2460**	**3790**	**5930**	**10000**	**15200**	**23700**	**31100**	**43300**

Certified coefficient of discharge Kdr (Values for D/G/H variable: DN20-100 < 3,5 bar / DN125-150 < 4 bar)

DN1 / DN2		20 / 32	25 / 40	32 / 50	40 / 65	50 / 80	65 / 100	80 / 125	100 / 150	125 / 200	150 / 250
TÜV · SV · . . - 688 · D/G/H	(bar)	0,74								0,70	

ARI-SAFE - Low pressure steam - safety valve

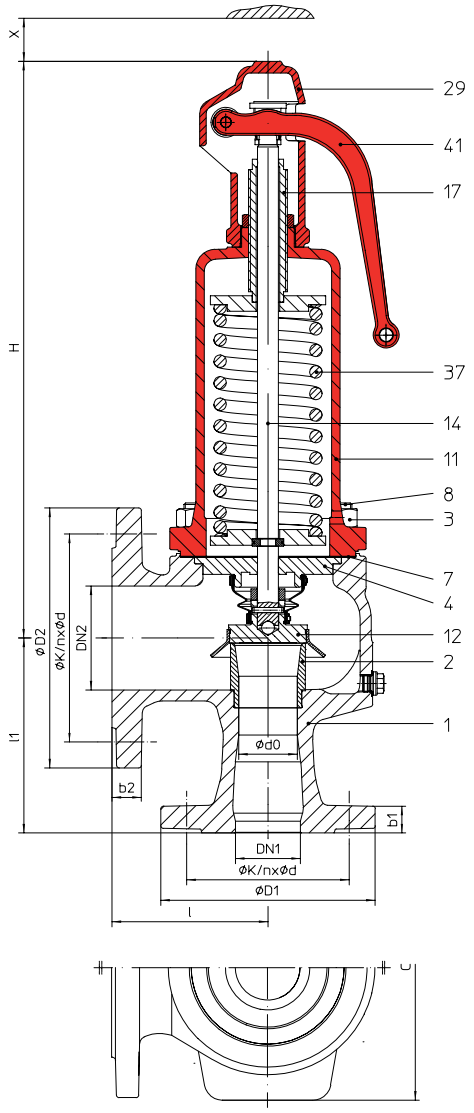

Fig. ... .904
open lifting device,
closed bonnet

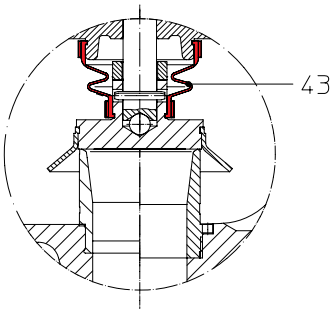

(Construction DN 20-100) (Construction DN125-150)
Disc metal seat; EPDM-Bellows seal

Figure	Nominal pressure	Material	Nominal diameter	Temperature range	Flange	Flangeholes / -thickness tolerances
12.904	PN16/16	EN-JL1040	DN20/32 - 150/250	-10°C to +120°C	DIN EN 1092-2	DIN 2533/2533

Construction		
Standard safety valve, spring loaded, direct loaded, EPDM-bellows, closed bonnet with control hole, open lifting device, stainless steel seat and spindle		
Application		
For low pressure steamgenerators up to 1 bar, acc. to DIN 4750 and DIN EN 12828 Heating systems in buildings		
Requirement		
acc. to TRD 721 Part 5		
Type-test approval		
Low pressure steam - safety valve:	Fig. 904	TÜV · SV · . . -688 · D

Sizing
refer to "Capacity".
Order data:
ARI-SAFE-Low pressure steam - safety valve, Figure ..., DN .../..., PN ..., Material ..., Set pressure ...barg

Parts			
Pos.	**Sp.p.**	**Description**	**Fig. 12.904**
1		Body	EN-GJL-250 , EN-JL1040
2		Seat	X6CrNiMoTi17-12-2, 1.4571
3		Studs	25CrMo4, 1.7218
4		Spindle guide	X20Cr13+QT, 1.4021+QT
7	x	Gasket	Pure graphite (CrNi laminated with graphite)
8		Hexagon nut	C35E, 1.1181
11		Bonnet, closed	EN-GJL-250 , EN-JL1040
12		Disc	X39CrMo17-1+QT, 1.4122+QT
14	x	Spindle	X20Cr13+QT, 1.4021+QT
17		Adjusting screw	X20Cr13+QT, 1.4021+QT
29		Cap, open	EN-GJL-250 , EN-JL1040
37	x	Spring	FDSiCr
41		Lever, open	EN-GJS-400-18U-LT, EN-JS1049
43		Bellows	EPDM 70 Shore A
	└ Spare parts		

DN1 / DN2			20 / 32	25 / 40	32 / 50	40 / 65	50 / 80	65 / 100	80 / 125	100 / 150	125 / 200	150 / 250
Dimensions												
d0		(mm)	18	22,5	29	36	45	58,5	72	90	106	125
A0		(mm^2)	254	398	661	1018	1590	2688	4072	6362	8825	12272
l		(mm)	85	100	110	115	120	140	160	180	200	225
l1		(mm)	95	105	115	140	150	170	195	220	250	285
H		(mm)	270	280	330	390	435	545	610	690	845	890
X		(mm)	150	150	200	250	300	350	400	500	500	500
C (Width support tongues)		(mm)	--	--	--	--	--	--	280	332	362	408
Drainhole with plug		(inch)	G 1/4"					G 3/8"				
Weights												
standard		(kg)	8,5	9,5	13,5	20	26	39	53	82	125	165
Flanges												
ØD1	PN16	(mm)	105	115	140	150	165	185	200	220	250	285
ØD2	PN16	(mm)	140	150	165	185	200	220	250	285	340	405
b1	EN-JL1040	(mm)	16	16	18	18	20	20	22	24	26	26
b2	EN-JL1040	(mm)	18	18	20	20	22	24	26	26	30	32
Flanges acc. to DIN EN 1092-1 / -2, Flangeholes/-thickness tolerances acc. to DIN 2533, raised face, facing acc. to DIN 2526 form C												

Standard-Flangeholes														
DN			**20**	**25**	**32**	**40**	**50**	**65**	**80**	**100**	**125**	**150**	**200**	**250**
ØK	PN16	(mm)	75	85	100	110	125	145	160	180	210	240	295	355
n x Ød	PN16	(mm)	4x14	4x14	4x18	4x18	4x18	4x18	8x18	8x18	8x18	8x22	12x22	12x26

Pressure-temperature-ratings	Intermediate values for max. permissible operational pressures can be determined by linear interpolation of the given temperature / pressure chart.

acc. to DIN EN 1092-2			-60°C to <-10°C*	-10°C to 120°C	150°C	200°C	250°C	300°C	350°C	400°C	450°C
EN-JL1040	16	(bar)	--	16	14,4	12,8	11,2	9,6	--	--	--

Capacity Saturated steam (incl. 10% overpressure)

Set pressure				DN1 (inlet) / DN2 (outlet)									
				20 / 32	**25 / 40**	**32 / 50**	**40 / 65**	**50 / 80**	**65 / 100**	**80 / 125**	**100 / 150**	**125 / 200**	**150 / 250**
0,2	barg	Saturated steam (kg/h)	(kg/h)	72	113	187	289	451	763	1155	1805	2241	3116
0,3	barg		(kg/h)	92	144	239	368	575	972	1472	2300	2867	3986
0,4	barg		(kg/h)	110	172	286	440	688	1163	1762	2753	3380	4700
0,5	barg		(kg/h)	125	196	325	501	783	1325	2006	3135	3858	5365
0,6	barg		(kg/h)	142	223	370	569	889	1503	2277	3557	4317	6004
0,7	barg		(kg/h)	158	248	412	634	990	1675	2537	3964	4748	6603
0,8	barg		(kg/h)	173	271	450	693	1082	1830	2772	4331	5201	7233
0,9	barg		(kg/h)	179	292	485	746	1166	1971	2986	4666	5616	7809
1	barg		(kg/h)	203	317	526	811	1270	2140	3245	5070	6030	8385

Conversionrates: 1 kW = 860 kcal/h* = 0,86 Mcal/h* = 3,6 MJ/h * not lawful units
1 Mcal/h* = 1000 kcal/h* = 1,163 kW

Information / restriction of technical rules need to be observed!

ARI-Valves of EN-JL1040 are not allowed to be operated in systems acc. to TRD 110.

The engineer, designing a system or a plant, is responsible for the selection of the correct valve.

Resistance and fitness must be verified (contact manufacturer for information, refer to Product overview and Resistance list).

ARI-SAFE-P - Standard safety valve D/G/F

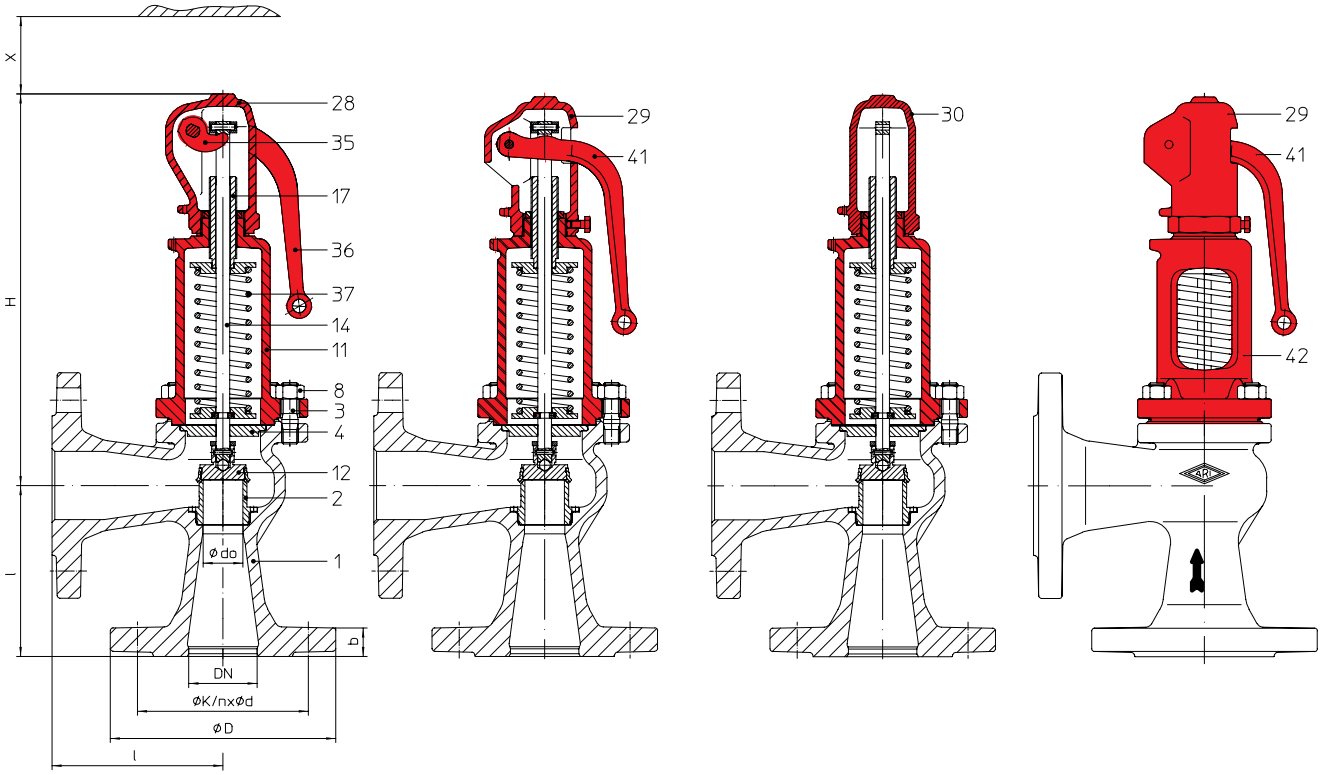

Fig. ... .921
closed lifting device,
closed bonnet

Fig. ... .922
open lifting device,
closed bonnet

Fig. ... .923
gastight cap,
closed bonnet

Fig. ... .924
open lifting device,
open bonnet

Figure	Nominal pressure	Material	Nominal diameter	Temperature range	Flange	Flangeholes / -thickness tolerances
12.921 / 922 / 923 / 924	PN16	EN-JL1040	DN15 - 100	-10°C to +300°C	DIN EN 1092-2	DIN 2533
35.921 / 922 / 923 / 924	PN40	1.0619+N	DN15 - 100	-10°C to +450°C	DIN EN 1092-1	DIN 2545
55.921 / 923	PN40	1.4408	DN15 - 100	-60°C to +400°C	DIN EN 1092-1	DIN 2545

Construction		
Safety valve, spring loaded, direct loaded		
Requirement		
Acc. to EN ISO 4126-1, VdTÜV-leaflet 100, AD2000-A2, TRD 421, observe TRB 801 No. 45 at material selection!		
Type-test approval		
Standard safety valve:	Fig. 921/923	TÜV · SV · . . -811 · D/G
Standard safety valve:	Fig. 921/923	TÜV · SV · . . -811 · F

Sizing	
for steam, air and water refer to capacity tables, calculations acc. to EN ISO 4126-1 and AD2000-A2.	
Details required	
Medium gasform:	Mass flow (kg/h), molar mass (kg/kmol), Isotropic exponent, temperature (°C), set pressure (barg), back pressure (barg)
Medium liquid:	Mass flow (kg/h), density (kg/m3), viscosity, temperature (°C), set pressure (barg), back pressure (barg)
Order data:	
ARI-SAFE-P - Safety valve, Figure ....., DN ..., PN .. , Material ....., Set pressure .... barg	

	standard: without metal bellows	**optional: with metal bellows** (refer to page 42)
Superimposed back pressure	no backpressure allowed	on request
Built up back pressure	max. 10% from set pressure (higher on request)	on request

Parts					
Pos.	**Sp.p.**	**Description**	**Fig. 12.921/922/923/924**	**Fig. 35.921/922/923/924**	**Fig. 55.921/923**
1		Body	EN-GJL-250 , EN-JL1040	GP240GH+N, 1.0619+N	GX5CrNiMo19-11-2, 1.4408
2		Seat	X6CrNiMoTi17-12-2, 1.4571		
3		Studs	25CrMo4, 1.7218		A4 - 70
4		Spindle guide	X20Cr13+QT, 1.4021+QT		X6CrNiMoTi17-12-2, 1.4571
8		Hexagon nut	C35E, 1.1181		A4
7	x	Gasket	Pure graphite (CrNi laminated with graphite)		
11		Bonnet, closed	EN-GJL-250 , EN-JL1040	EN-GJS-400-18U-LT, EN-JS1049	GX5CrNiMo19-11-2, 1.4408
12		Disc	X39CrMo17-1+QT, 1.4122+QT		X6CrNiMoTi17-12-2, 1.4571
14	x	Spindle	X20Cr13+QT, 1.4021+QT		X6CrNiMoTi17-12-2, 1.4571
17		Adjusting screw	X20Cr13+QT, 1.4021+QT		X2CrNiMo17-12-2, 1.4404
27	x	Sealing ring	CuFA		X6CrNiMoTi17-12-2, 1.4571
28		Cap, closed	EN-GJL-250 , EN-JL1040	EN-GJS-400-18U-LT, EN-JS1049	GX5CrNiMo19-11-2, 1.4408
29		Cap, open	EN-GJL-250 , EN-JL1040	EN-GJS-400-18U-LT, EN-JS1049	--
30		Cap, gastight	EN-GJL-250 , EN-JL1040	EN-GJS-400-18U-LT, EN-JS1049	GX5CrNiMo19-11-2, 1.4408
31	x	Packingrings	Pure graphite		
35		Lift fork	EN-GJS-400-15, EN-JS1030		GX5CrNiMo19-11-2, 1.4408
36		Lever, closed	EN-GJS-400-18U-LT, EN-JS1049		X6CrNiMoTi17-12-2, 1.4571
37	x	Spring	FDSiCr / 51CrV4, 1.8159		X10CrNi18-8, 1.4310
41		Lever, open	EN-GJS-400-18U-LT, EN-JS1049		--
42		Bonnet, open	EN-GJL-250 , EN-JL1040	EN-GJS-400-18U-LT, EN-JS1049	--
43		Bellows (optional)	EPDM 70 Shore A		
55		Bellows unit (optional)	X6CrNiMoTi17-12-2, 1.4571		
70		Balanced piston (optional)	X6CrNiMoTi17-12-2, 1.4571		
	└ Spare parts				

DN		**15**	**20**	**25**	**32**	**40**	**50**	**65**	**80**	**100**
Spring ranges: Standard design										
Standard safety valve Fig. 921/922/923/924	(barg)	0,3 - 0,5	0,3 - 0,5	0,2 - 0,6	0,2 - 0,55	0,2 - 0,4	0,2 - 0,4	0,2 - 0,5	0,2 - 0,6	0,2 - 0,5
	(barg)	> 0,5 - 1	> 0,5 - 1	> 0,6 - 1,1	> 0,55 - 0,8	> 0,4 - 0,6	> 0,4 - 0,6	> 0,5 - 1,2	> 0,6 - 1,2	> 0,5 - 1,1
	(barg)	> 1 - 1,4	> 1 - 1,4	> 1,1 - 2	> 0,8 - 1,2	> 0,6 - 1,1	> 0,6 - 1,2	> 1,2 - 2	> 1,2 - 2,1	> 1,1 - 1,7
	(barg)	> 1,4 - 1,9	> 1,4 - 1,9	> 2 - 2,7	> 1,2 - 2	> 1,1 - 1,8	> 1,2 - 1,8	> 2 - 2,7	> 2,1 - 2,6	> 1,7 - 2,4
	(barg)	> 1,9 - 2,5	> 1,9 - 2,5	> 2,7 - 3,7	> 2 - 3,3	> 1,8 - 2,7	> 1,8 - 2,5	> 2,7 - 3,4	> 2,6 - 3,2	> 2,4 - 3,1
	(barg)	> 2,5 - 3,5	> 2,5 - 3,5	> 3,7 - 5	> 3,3 - 5,2	> 2,7 - 4,3	> 2,5 - 3,2	> 3,4 - 4,5	> 3,2 - 4,2	> 3,1 - 4
	(barg)	> 3,5 - 5	> 3,5 - 4	> 5 - 8	> 5,2 - 8	> 4,3 - 6	> 3,2 - 4,5	> 4,5 - 5,5	> 4,2 - 5,5	> 4 - 5
	(barg)	> 5 - 7	> 4 - 5,5	> 8 - 10,5	> 8 - 11,5	> 6 - 9	> 4,5 - 8,5	> 5,5 - 6,8	> 5,5 - 6,5	> 5 - 8
	(barg)	> 7 - 10	> 5,5 - 7	> 10,5 - 15	> 11,5 - 16,5	> 9 - 12	> 8,5 - 13	> 6,8 - 8,5	> 6,5 - 9	> 8 - 11
	(barg)	> 10 - 16	> 7 - 10,5	> 15 - 23	> 16,5 - 22	> 12 - 17	> 13 - 17	> 8,5 - 14	> 9 - 12	> 11 - 17,5
	(barg)	> 16 - 25	> 10,5 - 17	> 23 - 35	> 22 - 30	> 17 - 30	> 17 - 23	> 14 - 23	> 12 - 16,5	> 17,5 - 27,5
	(barg)	> 25 - 33	> 17 - 25	> 35,1 - 40	> 30 - 40	> 30 - 40	> 23 - 34	> 23 - 34	> 16,5 - 20	> 27,5 - 40
	(barg)	> 33 - 40	> 25 - 37				> 34 - 40	> 34 - 40	> 20 - 33	
	(barg)		> 37 - 40						> 33 - 40	
Spring ranges: Bellows design (optional)										
Standard safety valve Fig. 921/923	(barg)	4 - 5	3 - 5,5	3 - 4,8	3 - 4,5	3 - 4,5	3 - 3,5	3 - 3,5	3 - 3,5	3 - 4,5
	(barg)	> 5 - 6	> 5,5 - 8	> 4,8 - 6	> 4,5 - 8	> 4,5 - 5,7	> 3,5 - 5	> 3,5 - 4,3	> 3,5 - 4,9	> 4,5 - 6,5
	(barg)	> 6 - 9	> 8 - 12	> 6 - 8	> 8 - 11	> 5,7 - 10	> 5 - 7	> 4,3 - 5,9	> 5,9 - 7	> 6,5 - 10
	(barg)	> 9 - 14	> 12 - 21	> 8 - 12,5	> 11 - 14,5	> 10 - 16	> 7 - 10,5	> 6,9 - 7,5	> 7 - 9	> 10 - 18
	(barg)	> 14 - 26	> 21 - 27,5	> 12,5 - 16	> 14,5 - 21	> 16 - 22	> 10,5 - 15,5	> 7,5 - 8,8	> 9 - 11	> 18 - 35
	(barg)	> 26 - 30	> 27,5 - 40	> 16 - 20,5	> 21 - 40	> 22 - 31	> 15,5 - 20	> 8,8 - 14	> 11 - 14,7	
	(barg)	> 30 - 40		> 20,5 - 30		> 31 - 40	> 20 - 40	> 14 - 21	> 14,7 - 18,8	
	(barg)			> 30 - 40				> 21 - 30	> 18,8 - 35	
	(barg)							> 30 - 40		

Information / restriction of technical rules need to be observed!

ARI-Valves of EN-JL1040 are not allowed to be operated in systems acc. to TRD 110.

A production permission acc. to TRB 801 No. 45 is available (acc. to TRB 801 No. 45 EN-JL1040 is not allowed.)

The engineer, designing a system or a plant, is responsible for the selection of the correct valve.

Resistance and fitness must be verified (contact manufacturer for information, refer to Product overview and Resistance list).

DN 1 / DN 2			15	20	25	32	40	50	65	80	100
Dimensions											
d0		(mm)	12	12	15	18	20	29	36	44	55
A0		(mm^2)	113	113	177	254	314	661	1018	1520	2376
l		(mm)	90	95	100	105	115	125	145	155	175
H		(mm)	260	260	270	285	290	290	340	400	450
H (Bellows design)		(mm)	285	285	300	325	330	345	400	455	515
X		(mm)	130	130	130	150	150	150	200	250	300
Y (Width support tongues)	EN-JL1040	(mm)	--	--	--	--	--	--	--	280	332
	EN-JS1049	(mm)	--	--	--	--	--	--	--	280	332
	1.0619+N	(mm)	--	--	--	--	--	204	242	280	332
	1.4408	(mm)	--	--	--	--	--	204	242	280	332
Weights											
standard		(kg)	5	5	5,5	8	9,5	11,5	15,5	20,5	33
optional: Bellows design		(kg)	5,4	5,4	6	9	10,5	12,8	17,5	23	37
Flanges											
ØD	PN16	(mm)	95	105	115	140	150	165	185	200	220
	PN40	(mm)	95	105	115	140	150	165	185	200	235
b	EN-JL1040	(mm)	14	16	16	18	18	20	20	22	24
	1.0619+N	(mm)	16	18	18	18	18	20	20	22	24
	1.4408	(mm)	16	18	18	18	18	20	20	22	24

Flanges acc. to DIN EN 1092-1 / -2, Flangeholes/-thickness tolerances acc. to DIN 2533 / 2545, raised face, facing acc. to DIN 2526 form C

Standard-Flangeholes													
DN			**15**	**20**	**25**	**32**	**40**	**50**	**65**	**80**	**100**	**125**	**150**
ØK	PN16	(mm)	65	75	85	100	110	125	145	160	180	210	240
n x Ød		(mm)	4x14	4x14	4x14	4x18	4x18	4x18	4x18 [1]	8x18	8x18	8x18	8x22
ØK	PN40	(mm)	65	75	85	100	110	125	145	160	190	220	250
n x Ød		(mm)	4x14	4x14	4x14	4x18	4x18	4x18	8x18	8x18	8x22	8x26	8x26

[1] also with 8 bore holes acc. to DIN EN 1092-1/-2 possible.

Pressure-temperature-ratings	Intermediate values for max. permissible operational pressures can be determined by linear interpolation of the given temperature / pressure chart.

acc. to DIN EN 1092-2			**-60°C to <-10°C [1]**	**-10°C to 120°C**	**150°C**	**200°C**	**250°C**	**300°C**	**350°C**	**400°C**	**450°C**
EN-JL1040	16	(bar)	--	16	14,4	12,8	11,2	9,6	--	--	--

acc. to manufacturers standard			**-60°C to <-10°C [1]**	**-10°C to 120°C**	**150°C**	**200°C**	**250°C**	**300°C**	**350°C**	**400°C**	**450°C**
1.0619+N	40	(bar)	30	40	38,1	35	32	28	25,7	23,8	13,1

acc. to DIN EN 1092-1			**-60°C to <-10°C [1]**	**-10°C to 100°C**	**150°C**	**200°C**	**250°C**	**300°C**	**350°C**	**400°C**	**450°C**
1.4408	40	(bar)	40	40	36,3	33,7	31,8	29,7	28,5	27,4	--

[1] Studs and nuts made of A4-70 (at temperatures below -10°C)

Certified coefficient of discharge Kdr (Values for D/G variable: < 3 bar)									
DN	**15**	**20**	**25**	**32**	**40**	**50**	**65**	**80**	**100**
TÜV · SV · . . -811 · D/G	0,37		0,34		0,37	0,34	0,37	0,34	
TÜV · SV · . . -811 · F	0,26		0,23		0,26	0,23	0,26	0,23	

Capacity saturated steam (incl. 10% overpressure)

DN			15	20	25	32	40	50	65	80	100
Set pressure			Saturated steam (kg/h)								
	0,2	(barg)	--	--	22	33	44	85	142	195	305
	0,3	(barg)	20	20	28	41	56	107	82	247	386
	0,4	(barg)	23	23	34	48	65	126	209	290	450
	0,5	(barg)	27	27	39	55	74	144	239	332	520
	0,6	(barg)	30	30	43	62	82	162	267	372	580
	0,8	(barg)	36	36	51	73	100	189	323	435	680
	1	(barg)	41	41	59	84	114	218	370	500	785
	2	(barg)	68	68	99	139	188	362	610	830	1300
	3	(barg)	95	95	137	197	265	510	860	1180	1840
	4	(barg)	119	119	171	246	330	640	1070	1470	2300
	5	(barg)	142	142	205	295	396	765	1280	1760	2750
	6	(barg)	166	166	239	343	460	890	1495	2050	3200
	7	(barg)	189	189	272	391	525	1015	1700	2340	3650
	8	(barg)	213	213	306	440	590	1140	1910	2630	4100
	9	(barg)	236	236	339	490	655	1265	2120	2910	4550
	10	(barg)	259	259	370	535	720	1390	2330	3200	5000
	12	(barg)	306	306	440	630	850	1640	2750	3780	5900
	14	(barg)	352	352	505	730	980	1890	3170	4350	6800
	16	(barg)	400	400	570	825	1105	2140	3590	4920	7700
	18	(barg)	445	445	640	920	1235	2390	4000	5500	8600
	20	(barg)	490	490	705	1020	1365	2640	4430	6080	9500
	22	(barg)	540	540	775	1110	1495	2890	4850	6660	10400
	24	(barg)	585	585	840	1210	1630	3140	5270	7240	11300
	25	(barg)	609	609	875	1260	1690	3270	5480	7530	11760
	26	(barg)	630	630	910	1310	1760	3400	5700	7820	12200
	28	(barg)	680	680	975	1405	1890	3650	6120	8400	13100
	30	(barg)	730	730	1040	1505	2020	3900	6550	8990	14000
↓ max. set pressure stainless steel version	32	(barg)	775	775	1110	1600	2150	4160	6980	9580	15000
	35	(barg)									
	36	(barg)									
	40	(barg)									

Capacity air (incl. 10% overpressure)

DN			15	20	25	32	40	50	65	80	100
Set pressure			Air 0°C and 1,013 bara (Nm^3/h)								
	0,2	(barg)	--	--	27	27	51	100	167	229	358
	0,3	(barg)	24	24	34	49	67	128	217	294	460
	0,4	(barg)	28	28	41	41	78	152	252	349	546
	0,5	(barg)	32	32	47	47	90	176	292	405	632
	0,6	(barg)	37	37	53	53	102	199	330	459	717
	0,8	(barg)	45	45	63	63	125	237	404	545	852
	1	(barg)	52	52	73	73	144	274	466	631	986
	2	(barg)	86	86	123	123	240	461	777	1061	1657
	3	(barg)	123	123	176	176	340	658	1103	1514	2365
	4	(barg)	154	154	221	221	428	826	1385	1902	2970
	5	(barg)	185	185	266	266	515	995	1665	2290	3580
	6	(barg)	217	217	311	311	602	1165	1950	2680	4180
	7	(barg)	248	248	356	356	689	1330	2230	3065	4790
	8	(barg)	279	279	401	401	776	1500	2515	3450	5390
	9	(barg)	311	311	446	446	863	1670	2800	3840	6000
	10	(barg)	342	342	491	491	950	1835	3080	4225	6600
	12	(barg)	405	405	581	581	1125	2170	3645	5000	7800
	14	(barg)	468	468	671	671	1300	2510	4200	5780	9000
	16	(barg)	530	530	761	761	1475	2845	4770	6550	10200
	18	(barg)	593	593	851	851	1645	3180	5340	7320	11450
	20	(barg)	656	656	941	941	1820	3520	5900	8100	12650
	22	(barg)	718	718	1031	1031	1995	3855	6465	8870	13850
	24	(barg)	781	781	1121	1121	2170	4190	7030	9650	15100
	25	(barg)	812	812	1167	1167	2250	4360	7310	10040	15680
	26	(barg)	844	844	1211	1211	2340	4530	7595	10400	16300
	28	(barg)	907	907	1302	1302	2520	4860	8160	11200	17500
	30	(barg)	969	969	1390	1390	2690	5200	8720	12000	18700
	32	(barg)	1032	1032	1480	1480	2870	5540	9290	12750	19900
	35	(barg)	1126	1126	1620	1620	3130	6040	10130	13900	21700
	36	(barg)	1155	1155	1665	1665	3215	6220	10420	14300	22360
← max. set pressure stainless steel version	40	(barg)	1283	1283	1840	1840	3560	6880	11500	15850	24700

Capacity water (incl. 10% overpressure)

DN			15	20	25	32	40	50	65	80	100
Set pressure			Water 20°C (t/h)								
	0,2	(bar)	--	--	0,97	1,4	1,95	3,63	6,33	8,36	13,06
	0,3	(bar)	0,84	0,84	1,16	1,67	2,33	4,30	7,46	9,80	15,22
	0,5	(bar)	1,11	1,11	1,54	2,21	3,09	5,74	10,0	13,22	20,6
	1	(bar)	1,57	1,57	2,17	3,13	4,37	8,12	14,15	18,69	29,2
	2	(bar)	2,22	2,22	3,07	4,42	6,17	11,48	20,0	26,4	41,3
	3	(bar)	2,72	2,72	3,76	5,42	7,56	14,07	24,5	32,4	50,6
	4	(bar)	3,14	3,14	4,35	6,26	8,73	16,24	28,3	37,4	58,4
	5	(bar)	3,51	3,51	4,86	7,0	9,76	18,16	31,6	41,8	65,3
	6	(bar)	3,85	3,85	5,32	7,66	10,69	19,89	34,6	45,8	71,6
	7	(bar)	4,16	4,16	5,75	8,28	11,55	21,5	37,4	49,5	77,3
	8	(bar)	4,45	4,45	6,14	8,85	12,35	23,0	40,0	52,9	82,6
	9	(bar)	4,72	4,72	6,52	9,39	13,1	24,4	42,4	56,1	87,6
	10	(bar)	4,97	4,97	6,87	9,89	13,81	25,7	44,7	59,1	92,4
	12	(bar)	5,44	5,44	7,53	10,84	15,12	28,1	49,0	64,8	100,2
	14	(bar)	5,88	5,88	8,13	11,71	16,34	30,4	52,9	69,9	109,3
	16	(bar)	6,29	6,29	8,69	12,51	17,46	32,5	56,6	74,8	116,8
	18	(bar)	6,67	6,67	9,22	13,27	18,52	34,4	60,0	79,3	123,9
	20	(bar)	7,03	7,03	9,72	14,0	19,53	36,3	63,3	83,6	130,6
	22	(bar)	7,37	7,37	10,19	14,7	20,5	38,1	66,3	87,7	137,0
	24	(bar)	7,7	7,7	10,64	15,33	21,4	39,8	69,3	91,6	143,1
	25	(bar)	7,86	7,86	10,86	15,64	21,8	40,6	70,7	93,3	146,0
	26	(bar)	8,0	8,0	11,06	15,92	22,2	41,3	72,0	95,1	148,6
	28	(bar)	8,3	8,3	11,47	16,52	23,1	42,9	74,7	98,7	154,2
	30	(bar)	8,6	8,6	11,88	17,1	23,9	44,4	77,3	102,2	159,7
	35	(bar)	9,28	9,28	12,83	18,47	25,8	47,9	83,5	110,4	172,5
	36	(bar)	9,4	9,4	13,0	18,7	26,1	48,7	84,7	111,9	174,9
↓ max. set pressure stainless steel version	40	(bar)	9,92	9,92	13,71	19,75	27,6	51,3	89,3	118,0	184,4

ARI-SAFE-TC - Full lift safety valve D/G, Standard safety valve F

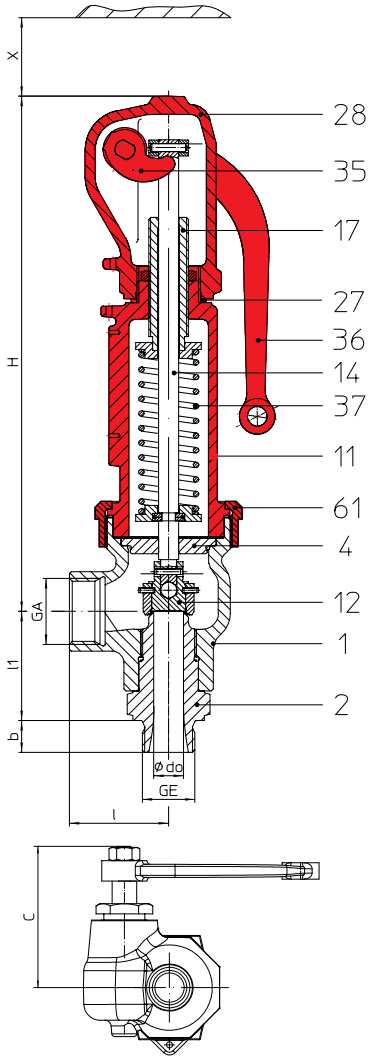

Fig. ... .941
closed lifting device,
closed bonnet

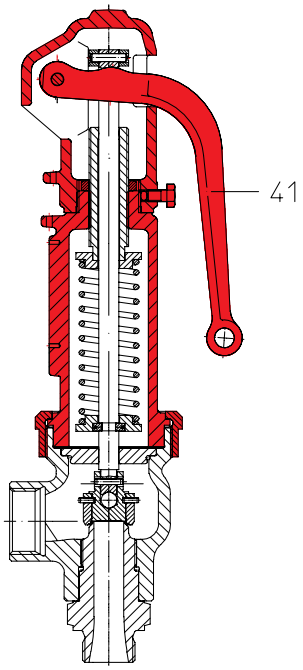

Fig. ... .942
open lifting device,
closed bonnet

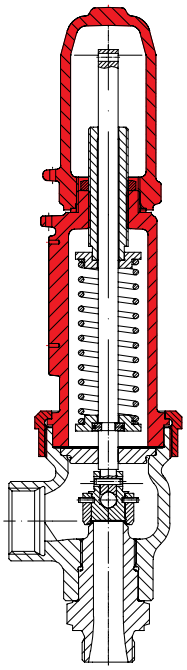

Fig. ... .943
gastight cap,
closed bonnet

Figure	Nominal pressure	Material	Nominal diameter	Temperature range	Thread
25.941 / 942 / 943	PN40	EN-JS1049	DN 15 - 25	-10°C to +350°C	DIN ISO 228 Part 1
55.941 / 943	PN40	1.4408	DN15 - 25	-60°C to +400°C	DIN ISO 228 Part 1

Construction		
Safety valve, spring loaded, direct loaded		
Requirement		
acc. to EN ISO 4126-1, VdTÜV-leaflet 100, AD2000-A2, TRD 421		
Type-test approval		
Full lift safety valve: (acc. to VdTÜV-leaflet 995)	Fig. 941/942/943	TÜV · SV · . . -995 · D/G
Standard safety valve:	Fig. 941/943	TÜV · SV · . . -995 · F

Sizing	
for steam, air and water refer to capacity tables, calculations acc. to EN ISO 4126-1, TRD 421 and AD2000-A2.	
Details required	
Medium gasform:	Mass flow (kg/h), molar mass (kg/kmol), Isotropic exponent, temperature (°C), set pressure (barg), back pressure (barg)
Medium liquid:	Mass flow (kg/h), density (kg/m3), viscosity, temperature (°C), set pressure (barg), back pressure (barg)
Order data:	
ARI-SAFE-TC - Safety valve, Figure ....., DN ... / ..., PN .. / .., Material ....., Set pressure .... bar	

	standard: without metal bellows	**optional: with metal bellows** (refer to page 42)
Superimposed back pressure	no backpressure allowed	on request
Built up back pressure	max. 10% from set pressure (higher on request)	on request

Parts				
Pos.	**Sp.p.**	**Description**	**Fig. 25.941/942/943**	**Fig. 55.941/943**
1		Body	EN-GJS-400-18U-LT, EN-JS1049	GX5CrNiMo19-11-2, 1.4408
2		Screwed seat	X6CrNiMoTi17-12-2, 1.4571	
4		Spindle guide	X20Cr13+QT, 1.4021+QT	X6CrNiMoTi17-12-2, 1.4571
7	x	Gasket	Pure graphite (CrNi laminated with graphite)	
11		Bonnet, closed	EN-GJS-400-18U-LT, EN-JS1049	GX5CrNiMo19-11-2, 1.4408
12		Disc	X39CrMo17-1+QT, 1.4122+QT	X6CrNiMoTi17-12-2, 1.4571
14	x	Spindle	X20Cr13+QT, 1.4021+QT	X6CrNiMoTi17-12-2, 1.4571
17		Adjusting screw	X20Cr13+QT, 1.4021+QT	X2CrNiMo17-12-2, 1.4404
27	x	Sealing ring	CuFA	X6CrNiMoTi17-12-2, 1.4571
28		Cap, closed	EN-GJS-400-18U-LT, EN-JS1049	GX5CrNiMo19-11-2, 1.4408
35		Lift fork	EN-GJS-400-15, EN-JS1030	GX5CrNiMo19-11-2, 1.4408
36		Lever, closed	EN-GJS-400-18U-LT, EN-JS1049	X6CrNiMoTi17-12-2, 1.4571
37	x	Spring	FDSiCr / 51CrV4, 1.8159	X10CrNi18-8, 1.4310
41		Lever, open	EN-GJS-400-18U-LT, EN-JS1049	--
43		Bellows (optional)	EPDM 70 Shore A	
55		Bellows unit (optional)	X6CrNiMoTi17-12-2, 1.4571	
61		Coupling	X6CrNiMoTi17-12-2, 1.4571	
70		Balanced piston (optional)	X6CrNiMoTi17-12-2, 1.4571	
	└ Spare parts			

DN		15	20	25
Spring ranges: Standard design				
Full lift safety valve Fig. 941/942/943	(barg)	0,3 - 0,6	0,3 - 0,48	0,2 - 0,4
	(barg)	> 0,6 - 0,9	> 0,48 - 0,68	> 0,4 - 0,88
	(barg)	> 0,9 - 1,35	> 0,68 - 1,35	> 0,88 - 1,5
	(barg)	> 1,35 - 2,2	> 1,35 - 2,1	> 1,5 - 2,1
	(barg)	> 2,2 - 3,3	> 2,1 - 3	> 2,1 - 2,6
	(barg)	> 3,3 - 4,5	> 3 - 4	> 2,6 - 3,2
	(barg)	> 4,5 - 5,5	> 4 - 5,5	> 3,2 - 4,2
	(barg)	> 5,5 - 6,7	> 5,5 - 7,7	> 4,2 - 6,2
	(barg)	> 6,7 - 8,2	> 7,7 - 11,4	> 6,2 - 8
	(barg)	> 8,2 - 11	> 11,4 - 15	> 8 - 10
	(barg)	> 11 - 13	> 15 - 20	> 10 - 15,5
	(barg)	> 13 - 18,5	> 20 - 28	> 15,5 - 18
	(barg)	> 18,5 - 32,4	> 28 - 35	> 18 - 29,9
	(barg)	> 32,4 - 40	> 35 - 40	> 30 - 40
Spring ranges: Bellows design (optional)				
Standard safety valve Fig. 941/943	(barg)	5,7 - 6,5	4 - 5,7	4 - 5,4
	(barg)	> 6,5 - 8	> 5,7 - 7	> 5,4 - 6,4
	(barg)	> 8 - 9,3	> 7 - 9,9	> 6,4 - 7,4
	(barg)	> 9,3 - 11	> 9,9 - 14	> 7,4 - 8,4
	(barg)	> 11 - 15	> 14 - 21	> 8,4 - 10,4
	(barg)	> 15 - 19	> 21 - 28,9	> 10,4 - 13,4
	(barg)	> 19 - 29	> 29,9 - 40	> 13,4 - 16,4
	(barg)	> 29 - 40		> 16,4 - 20,4
	(barg)			> 20,4 - 28

Information / restriction of technical rules need to be observed!
A production permission acc. to TRB 801 No. 45 is available.
The engineer, designing a system or a plant, is responsible for the selection of the correct valve.
Resistance and fitness must be verified (contact manufacturer for information, refer to Product overview and Resistance list).

DN		15	20	25
Dimensions				
G	(inch)	1/2" x 3/4"	3/4" x 1"	1" x 1 1/4"
d0	(mm)	12	15	18
A0	(mm^2)	113	177	254
GE	(inch)	1/2"	3/4"	1"
GA	(inch)	3/4"	1"	1 1/4"
b	(mm)	15	16	18
l	(mm)	50	50	50
l1	(mm)	53	55	58
H	(mm)	260	260	260
H (Bellows design)	(mm)	295	295	300
X	(mm)	120	120	120
C	(mm)	69	69	69
Weights				
standard	(kg)	3,5	3,5	3,8
optional: Bellows design	(kg)	4,4	4,4	4,7

Pressure-temperature-ratings	Intermediate values for max. permissible operational pressures can be determined by linear interpolation of the given temperature / pressure chart.

acc. to DIN EN 1092-2			**-60°C to <-10°C**	**-10°C to 120°C**	**150°C**	**200°C**	**250°C**	**300°C**	**350°C**	**400°C**	**450°C**
EN-JS1049	40	(bar)	on request	40	38,8	36,8	34,8	32	28	--	--

acc. to DIN EN 1092-1			**-60°C to <-10°C**	**-10°C to 100°C**	**150°C**	**200°C**	**250°C**	**300°C**	**350°C**	**400°C**	**450°C**
1.4408	40	(bar)	40	40	36,3	33,7	31,8	29,7	28,5	27,4	--

Certified coefficient of discharge Kdr (Values for D/G variable: < 3,5 bar)			
DN	**15**	**20**	**25**
TÜV · SV · . . -995 · D/G	0,64	0,60	0,75
TÜV · SV · . . -995 · F	0,45	0,42	0,53

Capacity saturated steam / air / water (incl. 10% overpressure)

DN		15	20	25		15	20	25		15	20	25	
Inlet: Male	(inch)	G1/2"	G3/4"	G1"		G1/2"	G3/4"	G1"		G1/2"	G3/4"	G1"	
Outlet: Female	(inch)	G3/4"	G1"	G1 1/4"	G1 1/2"	G3/4"	G1"	G1 1/4"	G1 1/2"	G3/4"	G1"	G1 1/4"	G1 1/2"
do	(mm)	12	15	18		12	15	18		12	15	18	
Set pressure		Saturated steam (kg/h)				Air 0°C and 1,013 bara (Nm^3/h)				Water 20°C (t/h)			
0,2	(barg)			75	75			88	88			3,22	3,22
0,3	(barg)	35	47	94	94	41	56	112	112	1,49	2,17	3,94	3,94
0,5	(barg)	46	65	124	124	57	79	151	151	1,92	2,80	5,10	5,10
1	(barg)	72	103	188	188	91	129	237	237	2,72	3,96	7,19	7,19
2	(barg)	120	172	320	320	153	219	405	405	3,85	5,60	10,17	10,17
3	(barg)	162	238	430	430	209	305	552	552	4,71	6,86	12,46	12,46
4	(barg)	206	300	545	545	266	390	702	702	5,44	7,92	14,39	14,39
5	(barg)	246	360	650	650	320	469	845	845	6,08	8,85	16,10	16,10
6	(barg)	285	420	755	755	375	549	988	988	6,66	9,70	17,62	17,62
7	(barg)	325	480	860	860	429	628	1130	1130	7,20	10,47	19,04	19,04
8	(barg)	370	540	970	970	483	708	1275	1275	7,69	11,20	20,30	20,30
9	(barg)	410	600	1075	1075	537	787	1415	1415	8,16	11,88	21,60	21,60
10	(barg)	450	655	1180	1180	592	867	1560	1560	8,60	12,52	22,70	22,70
11	(barg)	490	715	1290	1290	646	946	1705	1705	9,02	13,13	23,80	23,80
12	(barg)	530	775	1395	1395	700	1026	1845	1845	9,42	13,72	24,90	24,90
13	(barg)	570	835	1500	1500	754	1105	1990	1990	9,81	14,27	25,90	25,90
14	(barg)	610	890	1605	1605	809	1185	2130	2130	10,18	14,81	26,90	26,90
15	(barg)	650	950	1710	1710	863	1265	2275	2275	10,54	15,33	27,90	27,90
16	(barg)	690	1010	1820	1820	917	1345	2420	2420	10,88	15,84	28,80	28,80
17	(barg)	730	1070	1925	1925	971	1420	2560	2560	11,22	16,32	29,70	29,70
18	(barg)	770	1130	2030	2030	1025	1500	2705	2705	11,54	16,80	30,50	30,50
19	(barg)	810	1190	2135	2135	1080	1580	2850	2850	11,86	17,26	31,40	31,40
20	(barg)	850	1245	2245	2245	1135	1660	2990	2990	12,17	17,71	32,20	32,20
22	(barg)	930	1365	2455	2455	1240	1820	3275	3275	12,76	18,57	33,70	33,70
24	(barg)	1015	1485	2670	2670	1350	1980	3560	3560	13,33	19,40	35,20	35,20
26	(barg)	1095	1600	2885	2885	1460	2140	3850	3850	13,87	20,20	36,70	36,70
28	(barg)	1175	1725	3100	3100	1570	2300	4135	4135	14,40	20,90	38,10	38,10
30	(barg)	1260	1845	3320	3320	1675	2455	4420	4420	14,90	21,70	39,40	39,40
32	(barg)	1340	1965	3535	3535	1785	2615	4705	4705	15,39	22,40	40,70	40,70
34	(barg)					1895	2775	4990	4990	15,86	23,10	41,90	41,90
36	(barg)					2000	2940	5270	5270	16,28	23,8	43,1	43,1
40	(barg)					2220	3250	5850	5850	17,21	25,00	45,50	45,50

ARI-SAFE-TC - Spring loaded Fig. 945, Low pressure steam - safety valve Fig. 946

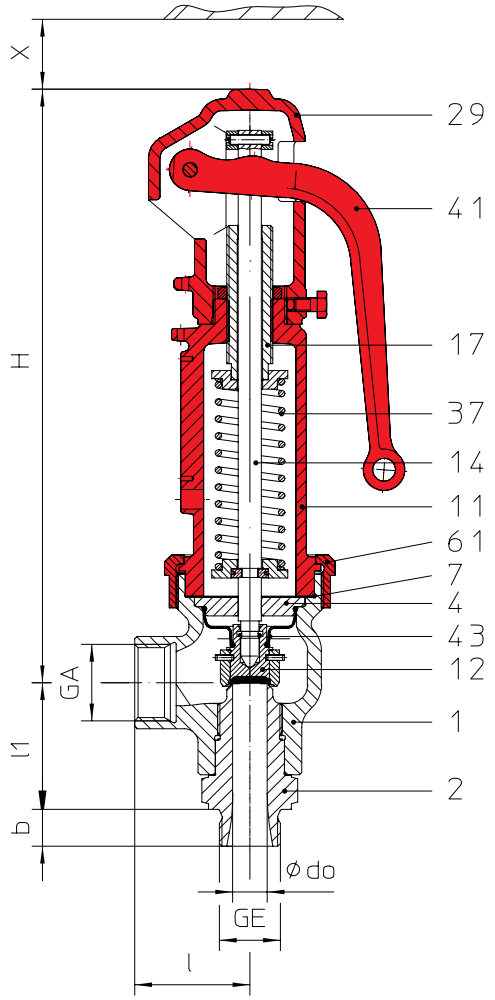

Fig. ... .945
open lifting device, closed bonnet

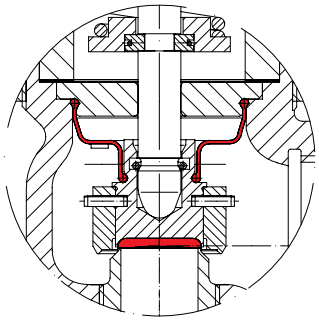

Fig. ... .945
EPDM-disc, soft seal insert; EPDM-bellows

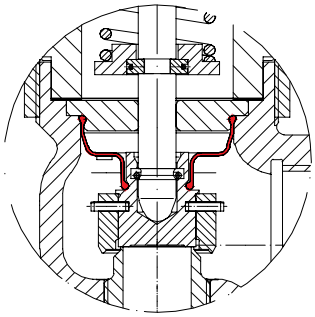

Fig. ... .946
Disc metal seat, EPDM-Bellows seal

Figure	Nominal pressure	Material	Nominal diameter (inlet)	Temperature range	Thread
25.945	PN40	EN-JS1049	DN15 - 25	-10°C to +120°C	DIN ISO 228 Part 1
25.946	PN40	EN-JS1049	DN15 - 25	-10°C to +120°C	DIN ISO 228 Part 1

	Fig. 945	Fig. 946
Construction		
	Standard safety valve, spring loaded, direct loaded disc with EPDM insert, EPDM-bellows, closed spring bonnet with control hole, open lifting device, stainless steel seat and spindle	Standard safety valve, spring-/weight loaded, direct loaded with EPDM-bellows, closed bonnet with control hole, open lifting device, stainless steel seat and spindle
Application		
	acc. to DIN EN 12828 Heating systems in buildings	For low pressure steamgenerators up to 1 bar, acc. to DIN 4750 and DIN EN 12828 Heating systems in buildings
Requirement		
	acc. to DIN EN ISO 4126-1 / TRD 721 Part 6	acc. to DIN EN ISO 4126-1 / TRD 721 Part 5
Type-test approval		
	Spring loaded: TÜV · SV · . . -997 · D/G/H	Low pressure steam - safety valve: TÜV · SV · . . -997 · D
Sizing		
	Acc. to TRD 721 Part 6.2.5, refer to "Capacity".	refer to "Capacity"
Order data:		
	ARI-SAFE-TC - spring loaded, Figure ....., DN ... / ..., PN .. / .., Material ....., Set pressure .... barg	ARI-SAFE-TC - Low pressure steam - safety valve, Figure ..., DN ... / ..., PN .. / ..., Material ..., Set pressure ...barg

Parts			
Pos.	**Sp.p.**	**Description**	**Fig. 25.945/946**
1		Body	EN-GJS-400-18U-LT, EN-JS1049
2		Screwed seat	X6CrNiMoTi17-12-2, 1.4571
4		Spindle guide	X20Cr13+QT, 1.4021+QT
7	x	Gasket	Pure graphite (CrNi laminated with graphite)
11		Bonnet, closed	EN-GJS-400-18U-LT, EN-JS1049
12	x	Disc	X6CrNiMoTi17-12-2, 1.4571
14	x	Spindle	X20Cr13+QT, 1.4021+QT
17		Adjusting screw	X20Cr13+QT, 1.4021+QT
29		Cap, open	EN-GJS-400-18U-LT, EN-JS1049
37	x	Spring	FDSiCr
41		Lever, open	EN-GJS-400-18U-LT, EN-JS1049
43		Bellows (optional)	EPDM 70 Shore A
61		Coupling	X6CrNiMoTi17-12-2, 1.4571
	└ Spare parts		

DN (inlet)		15	20	25
Spring ranges: Standard design				
Spring loaded Fig. 945 / Low pressure steam - safety valve Fig. 946	(barg)	0,3 - 0,6	0,3 - 0,5	0,2 - 0,4
	(barg)	> 0,6 - 0,9	> 0,5 - 0,7	> 0,4 - 0,9
	(barg)	> 0,9 - 1,35	> 0,7 - 1,35	> 0,9 - 1,5
	(barg)	> 1,35 - 2,2	> 1,35 - 2,1	> 1,5 - 2,1
	(barg)	> 2,2 - 3,3	> 2,1 - 3	> 2,1 - 2,6
	(barg)	> 3,3 - 4,5	> 3 - 4	> 2,6 - 3,2
	(barg)	> 4,5 - 5,5	> 4 - 5,5	> 3,2 - 4,2
	(barg)	> 5,5 - 6,7	> 5,5 - 7,7	> 4,2 - 6,2
	(barg)	> 6,7 - 8,2	> 7,7 - 11,5	> 6,2 - 8
	(barg)	> 8,2 - 11	> 11,5 - 15	> 8 - 10
	(barg)	> 11 - 13	> 15 - 16	> 10 - 15,5
	(barg)	> 13 - 16		> 15,5 - 16

Information / restriction of technical rules need to be observed!
The engineer, designing a system or a plant, is responsible for the selection of the correct valve.
Resistance and fitness must be verified (contact manufacturer for information, refer to Product overview and Resistance list).

DN (inlet)		15	20	25	
Dimensions					
G	(inch)	1/2" x 3/4"	3/4" x 1"	1" x 1 1/4"	1" x 1 1/2"
d0	(mm)	12	15	18	18
A0	(mm^2)	113	177	254	254
GE	(inch)	1/2"	3/4"	1"	1"
GA	(inch)	3/4"	1"	1 1/4"	1 1/2"
b	(mm)	15	16	18	18
l	(mm)	50	50	50	50
l1	(mm)	53	55	58	58
H	(mm)	260	260	260	260
X	(mm)	120	120	120	120
Weights					
standard	(kg)	3,5	3,5	3,8	3,8

Pressure-temperature-ratings	Intermediate values for max. permissible operational pressures can be determined by linear interpolation of the given temperature / pressure chart.

acc. to DIN EN 1092-2			**-60°C to <-10°C***	**-10°C to 120°C**	**150°C**	**200°C**	**250°C**	**300°C**	**350°C**	**400°C**	**450°C**
EN-JS1049	40	(bar)	on request	40	38,8	36,8	34,8	32	28	--	--

Certified coefficient of discharge Kdr (Values for D/G/H variable: < 3,5 bar)				
DN		**15**	**20**	**25**
TÜV · SV · . . - 997 · D/G/H	(bar)	0,64	0,60	0,75

Capacity water incl. 10% overpressure

Sizing safety valves for the volume flow of water expansion (DIN 4751 T2 - item 8.1 / DIN EN 12828 - item E.3)						
Differential pressure				**DN (inlet)**		
				15	**20**	**25**
1	(barg)	Water 20°C (kg/h)	(kg/h)	2700	3900	7000
2	(barg)		(kg/h)	3800	5600	10000
3	(barg)		(kg/h)	4700	6800	12400
4	(barg)		(kg/h)	5400	7900	14300
5	(barg)		(kg/h)	6000	8800	16000
6	(barg)		(kg/h)	6600	9700	17600
7	(barg)		(kg/h)	7200	10400	19000
8	(barg)		(kg/h)	7600	11200	20300
9	(barg)		(kg/h)	8100	11800	21600
10	(barg)		(kg/h)	8600	12500	22700
11	(barg)		(kg/h)	9000	13000	23800
12	(barg)		(kg/h)	9400	13700	24900
13	(barg)		(kg/h)	9800	14200	25900
14	(barg)		(kg/h)	10000	14800	26900
15	(barg)		(kg/h)	10500	15300	27900
16	(barg)		(kg/h)	10800	15800	28800
Sizing: 1 l/h ≙ 1 kW						

Fig. 945: Capacity saturated steam incl. 10% overpressure

Calculated acc. to TRD 721 Part 6 and AD2000-A2						
Set pressure				**DN (inlet)**		
				15	**20**	**25**
1	(barg)	Saturated steam (kg/h) / **Heating capacity (kW)**	(kg/h)	72	103	188
			(kW)	**44**	**63**	**115**
1,5	(barg)		(kg/h)	97	136	254
			(kW)	**58**	**82**	**154**
2	(barg)		(kg/h)	120	172	320
			(kW)	**72**	**103**	**191**
2,5	(barg)		(kg/h)	142	205	376
			(kW)	**85**	**122**	**224**
3	(barg)		(kg/h)	162	238	430
			(kW)	**96**	**140**	**253**
3,5	(barg)		(kg/h)	185	272	489
			(kW)	**109**	**159**	**287**
4	(barg)		(kg/h)	206	300	545
			(kW)	**120**	**176**	**316**
4,5	(barg)		(kg/h)	226	331	596
			(kW)	**131**	**192**	**346**
5	(barg)		(kg/h)	246	360	650
			(kW)	**142**	**208**	**375**
5,5	(barg)		(kg/h)	267	391	703
			(kW)	**153**	**224**	**403**
6	(barg)		(kg/h)	285	420	755
			(kW)	**164**	**240**	**432**
6,5	(barg)		(kg/h)	307	450	810
			(kW)	**174**	**256**	**460**
7	(barg)		(kg/h)	325	480	860
			(kW)	**185**	**271**	**488**
7,5	(barg)		(kg/h)	348	509	917
			(kW)	**195**	**286**	**516**
8	(barg)		(kg/h)	370	540	970
			(kW)	**206**	**302**	**543**
9	(barg)		(kg/h)	410	600	1075
			(kW)	**227**	**332**	**598**
10	(barg)		(kg/h)	450	655	1180
			(kW)	**247**	**362**	**651**
11	(barg)		(kg/h)	490	715	1290
			(kW)	**267**	**391**	**705**
12	(barg)		(kg/h)	530	775	1395
			(kW)	**287**	**421**	**757**
13	(barg)		(kg/h)	570	835	1500
			(kW)	**307**	**449**	**809**
14	(barg)		(kg/h)	610	890	1605
			(kW)	**326**	**478**	**860**
15	(barg)		(kg/h)	650	950	1710
			(kW)	**346**	**506**	**911**
16	(barg)		(kg/h)	690	1010	1820
			(kW)	**365**	**534**	**962**

Fig. 946: Capacity saturated steam incl. 10% overpressure

Set pressure				**DN (inlet)**		
				15	**20**	**25**
0,2	(barg)	Saturated steam (kg/h)	(kg/h)	--	--	67
0,3	(barg)		(kg/h)	32	43	86
0,4	(barg)		(kg/h)	38	53	103
0,5	(barg)		(kg/h)	44	62	117
0,6	(barg)		(kg/h)	50	71	133
0,7	(barg)		(kg/h)	56	78	146
0,8	(barg)		(kg/h)	62	86	163
0,9	(barg)		(kg/h)	67	95	175
1	(barg)		(kg/h)	72	103	188

Conversionrates: 1 kW = 860 kcal/h* = 0,86 Mcal/h* = 3,6 MJ/h
1 Mcal/h* = 1000 kcal/h* = 1,163 kW
* not lawful units

ARI-SAFE-TCP - Standard safety valve D/G/F

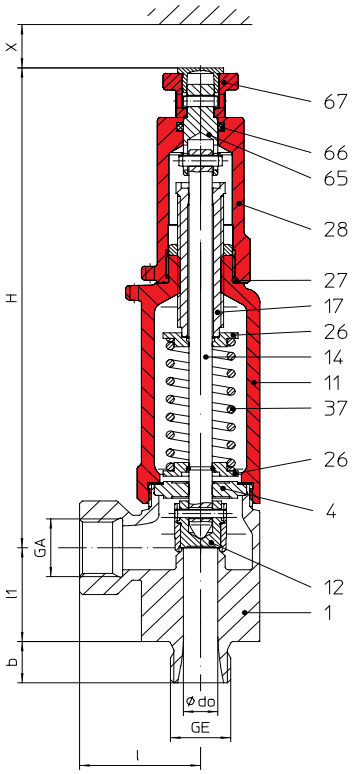

Fig. ... .961
closed lifting device

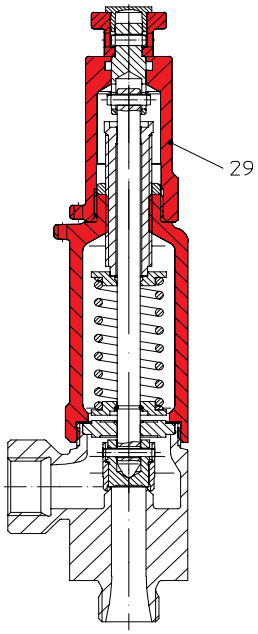

Fig. ... .962
open lifting device

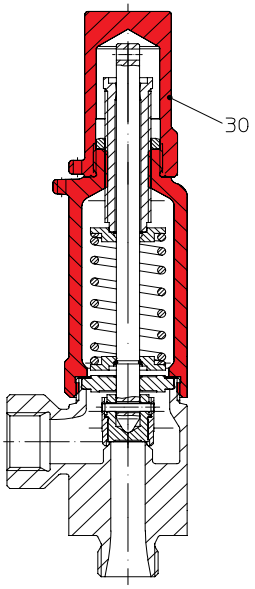

Fig. ... .963
gastight cap

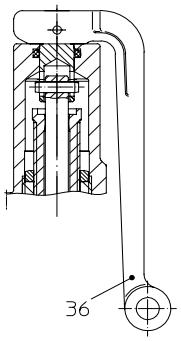

Fig. ... .961 / Fig. ... .962
optional with lever

Figure	Nominal pressure	Material	Nominal diameter	Temperature range	Thread
67.961 / 962 / 963	PN100	1.4581/EN-JS1049	DN15 - 25	-10°C to +300°C (up to +400°C on request)	DIN ISO 228 Part 1
57.961 / 963	PN100	1.4581	DN15 - 25	-60°C to +300°C (up to +400°C on request)	DIN ISO 228 Part 1

Construction		
Safety valve, spring loaded, direct loaded		
Requirement		
Acc. to EN ISO 4126-1, VdTÜV-leaflet 100, AD2000-A2		
Type-test approval		
Standard safety valve:	Fig. 961/962/963	TÜV · SV · . . -1041 · D/G
Standard safety valve:	Fig. 961/963	TÜV · SV · . . -1041 · F

Sizing	
for steam, air and water refer to capacity tables, calculations acc. to EN ISO 4126-1, TRD 421 and AD2000-A2	
Details required	
Medium gasform:	Mass flow (kg/h), molar mass (kg/kmol), Isotropic exponent, temperature (°C), set pressure (barg), back pressure (barg)
Medium liquid:	Mass flow (kg/h), density (kg/m$^{3)}$, viscosity, temperature (°C), set pressure (barg), back pressure (barg)
Order data:	
ARI-SAFE-TCP - Safety valve, Figure ....., DN ... / ..., PN .. / .., Material ....., Set pressure .... bar	

	standard: without metal bellows
Superimposed back pressure	no backpressure allowed
Built up back pressure	max. 10% from set pressure (higher on request)

Parts				
Pos.	**Sp.p.**	**Description**	**Fig. 67.961/962/963**	**Fig. 57.961/963**
1		Body	GX5CrNiMoN19-11-2, 1.4581	
4		Spindle guide	X6CrNiMoTi17-12-2, 1.4571	
7	x	Gasket	Pure graphite (CrNi laminated with graphite)	
11		Bonnet, closed	EN-GJS-400-18U-LT, EN-JS1049	GX5CrNiMoN19-11-2, 1.4581
12		Disc	X6CrNiMoTi17-12-2, 1.4571	
14	x	Spindle	X6CrNiMoTi17-12-2, 1.4571	
17		Adjusting screw	X2CrNiMo17-12-2, 1.4404	
27	x	O-ring	FPM	
28		Cap, closed	GX5CrNiMoN19-11-2, 1.4581	
29		Cap, open	GX5CrNiMoN19-11-2, 1.4581	
30		Cap, gastight	EN-GJS-400-18U-LT, EN-JS1049	GX5CrNiMoN19-11-2, 1.4581
36		Lever, closed (optional: Fig. ... .961 / Fig. ... .962)	EN AC-4420 (Al)	
37	x	Spring	FDSiCr	X10CrNi18-8, 1.4310
65		Coupling	X6CrNiMoTi17-12-2, 1.4571	
66		O-ring	FPM	
67		Lift button	X6CrNiMoTi17-12-2, 1.4571	
	└ Spare parts			

DN		15	20	25
Spring ranges: Standard design				
Standard safety valve Fig. 961/962/963	(barg)	0,2 - 0,25		
	(barg)	> 0,25 - 0,5		
	(barg)	> 0,5 - 1		
	(barg)	> 1 - 1,4		
	(barg)	> 1,4 - 2,95		
	(barg)	> 2,95 - 4,9		
	(barg)	> 4,9 - 12		
	(barg)	> 12 - 20		
	(barg)	> 20 - 27		
	(barg)	> 27 - 35		
	(barg)	> 35 - 45		
	(barg)	> 45 - 59		
	(barg)	> 59 - 100		

Information / restriction of technical rules need to be observed!
The engineer, designing a system or a plant, is responsible for the selection of the correct valve.
Resistance and fitness must be verified (contact manufacturer for information, refer to Product overview and Resistance list).

DN		15		20			25
Dimensions							
G	(inch)	1/2" x 1/2"	1/2" x 3/4"	3/4" x 1/2"	3/4" x 3/4"	3/4" x 1"	1" x 1"
d0	(mm)	12	12	12	12	12	12
A0	(mm^2)	113	113	113	113	113	113
GE	(inch)	1/2"	1/2"	3/4"	3/4"	3/4"	1"
GA	(inch)	1/2"	3/4"	1/2"	3/4"	1"	1"
b	(mm)	15	15	16	16	16	18
l	(mm)	42	47	42	47	50	50
l1	(mm)	34	34	34	34	34	34
H	(mm)	189	189	189	189	189	189
X	(mm)	100	100	100	100	100	100
Weights							
standard	(kg)	1,2	1,2	1,2	1,2	1,2	1,2

Pressure-temperature-ratings	Intermediate values for max. permissible operational pressures can be determined by linear interpolation of the given temperature / pressure chart.

acc. to DIN EN 1092-1			**-60°C to <-10°C**	**-10°C to 100°C**	**150°C**	**200°C**	**250°C**	**300°C**	**350°C**	**400°C**	**450°C**
1.4581	100	(bar)	50	100	98	93,3	88,5	83,3	80,4	78	--

Certified coefficient of discharge Kdr (Values for D/G variable: < 4 bar)			
DN	**15**	**20**	**25**
TÜV · SV · . . - 1041 · D/G	0,30		
TÜV · SV · . . - 1041 · F	0,23		

Capacity saturated steam / Air / Water (incl. 10% overpressure)

DN			15	20	25	15	20	25	15	20	25
Connections		(inch)	G1/2" x 1/2"	G3/4" x 1/2"	G1" x 1"	G1/2" x 1/2"	G3/4" x 1/2"	G1" x 1"	G1/2" x 1/2"	G3/4" x 1/2"	G1" x 1"
		(inch)	G1/2" x 3/4"	G3/4" x 3/4"		G1/2" x 3/4"	G3/4" x 3/4"		G1/2" x 3/4"	G3/4" x 3/4"	
		(inch)		G3/4" x 1"			G3/4" x 1"			G3/4" x 1"	
do		(mm)	12			12			12		
Set pressure			Saturated steam (kg/h)			Air 0°C and 1,013 bara (Nm^3/h)			Water 20°C (t/h)		
↓ max. set pressure stainless steel version	0,2	(barg)	14	14	14	16	16	16	0,62	0,62	0,62
	0,5	(barg)	24	24	24	29	29	29	0,98	0,98	0,98
	1	(barg)	35	35	35	44	44	44	1,39	1,39	1,39
	2	(barg)	56	56	56	71	71	71	1,97	1,97	1,97
	3	(barg)	75	75	75	96	96	96	2,41	2,41	2,41
	4	(barg)	96	96	96	125	125	125	2,78	2,78	2,78
	5	(barg)	116	116	116	150	150	150	3,11	3,11	3,11
	6	(barg)	135	135	135	176	176	176	3,41	3,41	3,41
	7	(barg)	153	153	153	201	201	201	3,68	3,68	3,68
	8	(barg)	172	172	172	227	227	227	3,93	3,93	3,93
	9	(barg)	191	191	191	252	252	252	4,17	4,17	4,17
	10	(barg)	210	210	210	277	277	277	4,40	4,40	4,40
	11	(barg)	229	229	229	303	303	303	4,61	4,61	4,61
	12	(barg)	248	248	248	328	328	328	4,82	4,82	4,82
	13	(barg)	267	267	267	354	354	354	5,01	5,01	5,01
	14	(barg)	286	286	286	379	379	379	5,20	5,20	5,20
	15	(barg)	304	304	304	405	405	405	5,39	5,39	5,39
	16	(barg)	323	323	323	430	430	430	5,56	5,56	5,56
	17	(barg)	342	342	342	455	455	455	5,73	5,73	5,73
	18	(barg)	361	361	361	481	481	481	5,90	5,90	5,90
	19	(barg)	380	380	380	506	506	506	6,06	6,06	6,06
	20	(barg)	399	399	399	532	532	532	6,22	6,22	6,22
	25	(barg)	494	494	494	659	659	659	6,95	6,95	6,95
	30	(barg)	590	590	590	786	786	786	7,62	7,62	7,62
	35	(barg)	686	686	686	913	913	913	8,23	8,23	8,23
	40	(barg)	784	784	784	1040	1040	1040	8,79	8,79	8,79
	45	(barg)	883	883	883	1165	1165	1165	9,33	9,33	9,33
	50	(barg)	983	983	983	1295	1295	1295	9,83	9,83	9,83
	55	(barg)	1085	1085	1085	1420	1420	1420	10,31	10,31	10,31
	60	(barg)	1185	1185	1185	1550	1550	1550	10,77	10,77	10,77
	65	(barg)	1290	1290	1290	1675	1675	1675	11,21	11,21	11,21
	70	(barg)	1400	1400	1400	1800	1800	1800	11,63	11,63	11,63
	75	(barg)	1500	1500	1500	1930	1930	1930	12,04	12,04	12,04
	80	(barg)				2055	2055	2055	12,44	12,44	12,44
	85	(barg)				2185	2185	2185	12,82	12,82	12,82
	90	(barg)				2310	2310	2310	13,19	13,19	13,19
	95	(barg)				2438	2438	2438	13,5	13,5	13,5
	100	(barg)				2565	2565	2565	13,76	13,76	13,76

ARI-SAFE-TCS - Standard safety valve D/G/F

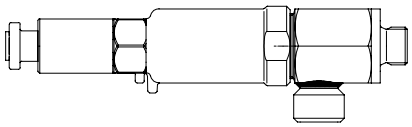

ALSO FOR HORIZONTAL APPLICATION
(please indicate installation position horizontal/vertical up to 5 bar set pressure with your order)

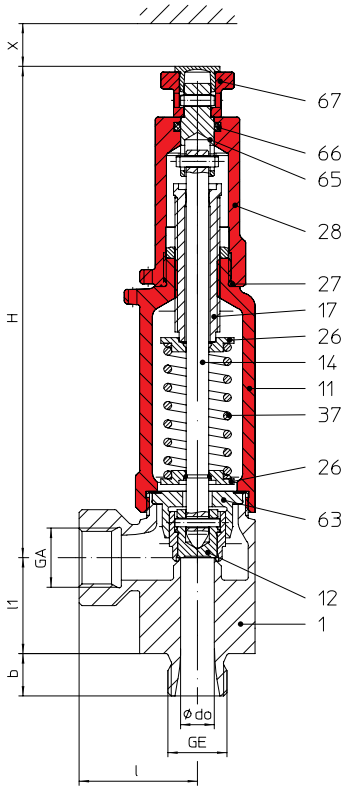

Fig. ... .951
closed lifting device

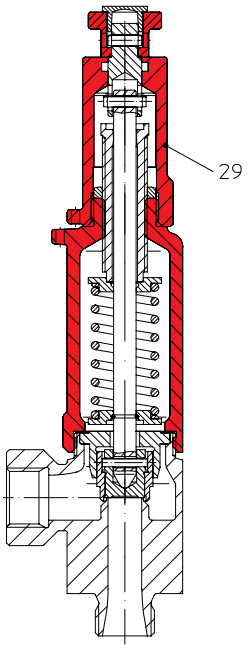

Fig. ... .952
open lifting device

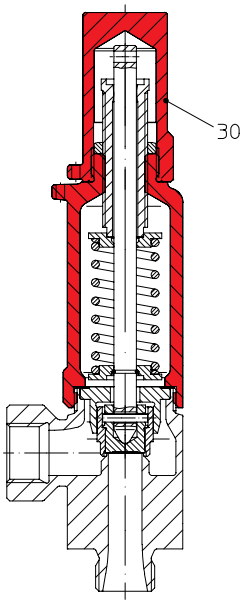

Fig. ... .953
gastight cap

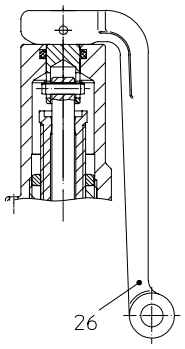

Fig. ... .951 / Fig. ... .952
optional with lever

Figure	Nominal pressure	Material	Nominal diameter	Temperature range	Thread
67.951 / 952 / 953	PN100	1.4581/EN-JS1049	DN15 - 25	-10°C to +300°C (up to +400°C on request)	DIN ISO 228 Part 1
57.951 / 953	PN100	1.4581	DN15 - 25	-60°C to +300°C (up to +400°C on request)	DIN ISO 228 Part 1

Construction		
Safety valve, spring loaded, direct loaded		
Requirement		
acc. to EN ISO 4126-1, VdTÜV-leaflet 100, AD2000-A2		
Type-test approval		
Standard safety valve:	Fig. 951/952/953	TÜV · SV · . . -1041 · D/G
Standard safety valve:	Fig. 951/953	TÜV · SV · . . -1041 · F

Sizing	
for steam, air and water refer to capacity tables, calculations acc. to EN ISO 4126-1, TRD 421 and AD2000-A2	
Details required	
Medium gasform:	Mass flow (kg/h), molar mass (kg/kmol), Isotropic exponent, temperature (°C), set pressure (barg), back pressure (barg)
Medium liquid:	Mass flow (kg/h), density (kg/m$^{3)}$, viscosity, temperature (°C), set pressure (barg), back pressure (barg)
Order data:	
ARI-SAFE-TCS - Safety valve, Figure ....., DN ... / ..., PN .. / .., Material ....., Set pressure .... bar, Installation position	

	standard: without metal bellows
Superimposed back pressure	no backpressure allowed
Built up back pressure	max. 10% from set pressure (higher on request)

Parts				
Pos.	**Sp.p.**	**Description**	**Fig. 67.961/962/963**	**Fig. 57.961/963**
1		Body	GX5CrNiMoN19-11-2, 1.4581	
7	x	Gasket	Pure graphite (CrNi laminated with graphite)	
11		Bonnet, closed	EN-GJS-400-18U-LT, EN-JS1049	GX5CrNiMoN19-11-2, 1.4581
12		Disc	X6CrNiMoTi17-12-2, 1.4571	
14	x	Spindle	X6CrNiMoTi17-12-2, 1.4571	
17		Adjusting screw	X2CrNiMo17-12-2, 1.4404	
27		O-ring	FPM	
28		Cap, closed	GX5CrNiMoN19-11-2, 1.4581	
29		Cap, open	GX5CrNiMoN19-11-2, 1.4581	
30		Cap, gastight	EN-GJS-400-18U-LT, EN-JS1049	GX5CrNiMoN19-11-2, 1.4581
36		Lever, closed (optional: Fig. ... .951 / Fig. ... .952)	EN AC-4420 (Al)	
37	x	Spring	FDSiCr	X10CrNi18-8, 1.4310
63		Guide bush	X6CrNiMoTi17-12-2, 1.4571	
65		Coupling	X6CrNiMoTi17-12-2, 1.4571	
66		O-ring	FPM	
67		Lift button	X6CrNiMoTi17-12-2, 1.4571	
	└ Spare parts			

DN		15	20	25
Spring ranges: Standard design				
Standard safety valve Fig. 951/952/953	(barg)	0,5		
	(barg)	> 0,5 - 1		
	(barg)	> 1 - 1,4		
	(barg)	> 1,4 - 2,95		
	(barg)	> 2,95 - 4,9		
	(barg)	> 4,9 - 12		
	(barg)	> 12 - 20		
	(barg)	> 20 - 27		
	(barg)	> 27 - 35		
	(barg)	> 35 - 45		
	(barg)	> 45 - 59		
	(barg)	> 59 - 100		

Information / restriction of technical rules need to be observed!
The engineer, designing a system or a plant, is responsible for the selection of the correct valve.
Resistance and fitness must be verified (contact manufacturer for information, refer to Product overview and Resistance list).

DN		15		20			25
Dimensions							
G	(inch)	1/2" x 1/2"	1/2" x 3/4"	3/4" x 1/2"	3/4" x 3/4"	3/4" x 1"	1" x 1"
d0	(mm)	12	12	12	12	12	12
A0	(mm^2)	113	113	113	113	113	113
GE	(inch)	1/2"	1/2"	3/4"	3/4"	3/4"	1"
GA	(inch)	1/2"	3/4"	1/2"	3/4"	1"	1"
b	(mm)	15	15	16	16	16	18
l	(mm)	42	47	42	47	50	50
l1	(mm)	34	34	34	34	34	34
H	(mm)	189	189	189	189	189	189
X	(mm)	100	100	100	100	100	100
Weights							
standard	(kg)	1,2	1,2	1,2	1,2	1,2	1,2

Pressure-temperature-ratings	Intermediate values for max. permissible operational pressures can be determined by linear interpolation of the given temperature / pressure chart.

acc. to DIN EN 1092-1			**-60°C to <-10°C**	**-10°C to 100°C**	**150°C**	**200°C**	**250°C**	**300°C**	**350°C**	**400°C**	**450°C**
1.4581	100	(bar)	50	100	98	93,3	88,5	83,3	80,4	78	--

Certified coefficient of discharge Kdr (Values for D/G variable: < 3 bar)			
DN	**15**	**20**	**25**
TÜV · SV · . . - 1041 · D/G	0,26		
TÜV · SV · . . - 1041 · F	0,19		

Capacity saturated steam / air / water (incl. 10% overpressure)

DN			15	20	25	15	20	25	15	20	25
Connections		(inch)	G1/2" x 1/2"	G3/4" x 1/2"	G1" x 1"	G1/2" x 1/2"	G3/4" x 1/2"	G1" x 1"	G1/2" x 1/2"	G3/4" x 1/2"	G1" x 1"
		(inch)	G1/2" x 3/4"	G3/4" x 3/4"		G1/2" x 3/4"	G3/4" x 3/4"		G1/2" x 3/4"	G3/4" x 3/4"	
				G3/4" x 1"			G3/4" x 1"			G3/4" x 1"	
do		(mm)	12			12			12		
Set pressure			Saturated steam (kg/h)			Air 0°C and 1,013 bara (Nm^3/h)			Water 20°C (t/h)		
↓ horizontal application	0,5	(barg)	*20*	*20*	*20*	*24*	*24*	*24*	*0,81*	*0,81*	*0,81*
	1	(barg)	*30*	*30*	*30*	*37*	*37*	*37*	*1,15*	*1,15*	*1,15*
	2	(barg)	*48*	*48*	*48*	*62*	*62*	*62*	*1,62*	*1,62*	*1,62*
	3	(barg)	*68*	*68*	*68*	*86*	*86*	*86*	*1,99*	*1,99*	*1,99*
	4	(barg)	*84*	*84*	*84*	*108*	*108*	*108*	*2,30*	*2,30*	*2,30*
↓ max. set pressure stainless steel version	5	(barg)	100	100	100	130	130	130	2,57	2,57	2,57
	6	(barg)	117	117	117	152	152	152	2,81	2,81	2,81
	7	(barg)	133	133	133	174	174	174	3,04	3,04	3,04
	8	(barg)	149	149	149	196	196	196	3,25	3,25	3,25
	9	(barg)	166	166	166	218	218	218	3,45	3,45	3,45
	10	(barg)	182	182	182	240	240	240	3,63	3,63	3,63
	11	(barg)	198	198	198	262	262	262	3,81	3,81	3,81
	12	(barg)	215	215	215	284	284	284	3,98	3,98	3,98
	13	(barg)	231	231	231	306	306	306	4,14	4,14	4,14
	14	(barg)	247	247	247	328	328	328	4,3	4,3	4,3
	15	(barg)	264	264	264	351	351	351	4,45	4,45	4,45
	16	(barg)	280	280	280	373	373	373	4,59	4,59	4,59
	17	(barg)	297	297	297	395	395	395	4,74	4,74	4,74
	18	(barg)	313	313	313	417	417	417	4,87	4,87	4,87
	19	(barg)	329	329	329	439	439	439	5,01	5,01	5,01
	20	(barg)	346	346	346	461	461	461	5,14	5,14	5,14
	25	(barg)	428	428	428	571	571	571	5,74	5,74	5,74
	30	(barg)	512	512	512	681	681	681	6,29	6,29	6,29
	35	(barg)	595	595	595	791	791	791	6,80	6,80	6,80
	40	(barg)	680	680	680	901	901	901	7,26	7,26	7,26
	45	(barg)	765	765	765	1010	1010	1010	7,71	7,71	7,71
	50	(barg)	852	852	852	1120	1120	1120	8,12	8,12	8,12
	55	(barg)	940	940	940	1230	1230	1230	8,52	8,52	8,52
	60	(barg)	1030	1030	1030	1340	1340	1340	8,90	8,90	8,90
	65	(barg)	1120	1120	1120	1450	1450	1450	9,26	9,26	9,26
	70	(barg)	1200	1200	1200	1560	1560	1560	9,61	9,61	9,61
	75	(barg)	1300	1300	1300	1675	1675	1675	9,95	9,95	9,95
	80	(barg)				1785	1785	1785	10,27	10,27	10,27
	85	(barg)				1895	1895	1895	10,59	10,59	10,59
	90	(barg)				2005	2005	2005	10,90	10,90	10,90
	95	(barg)				2110	2110	2110	11,16	11,16	11,16
	100	(barg)				2220	2220	2220	11,36	11,36	11,36

Soft sealing disc							
Body design	**Pos.**	**Description**	**P min.**		**Material**	**Temperature range**	**Abbreviation**
EN-JL1040, EN-JS1049, 1.0619+N	12	Disc	0,5 bar	(lower values on request)	X20Cr13+QT, 1.4021+QT / **EPDM**	-35 °C to +150 °C	**E**
			0,5 bar		X20Cr13+QT, 1.4021+QT / **FPM Viton (FKM)**	-20 °C to +180 °C	**V**
			0,5 bar		X20Cr13+QT, 1.4021+QT / **CR Neoprene**	-30 °C to +100 °C	**N**
			1,0 bar [1)]		X20Cr13+QT, 1.4021+QT / **SHR**	-20 °C to +220 °C	**S**
1.4408, 1.4581	12	Disc	0,5 bar		X6CrNiMoTi17-12-2, 1.4571 / **EPDM**	-35 °C to +150 °C	**E**
			0,5 bar		X6CrNiMoTi17-12-2, 1.4571 / **FPM Viton (FKM)**	-20 °C to +180 °C	**V**
			0,5 bar		X6CrNiMoTi17-12-2, 1.4571 / **CR Neoprene**	-30 °C to +100 °C	**N**
			1,0 bar [1)]		X6CrNiMoTi17-12-2, 1.4571 / **SHR**	-20 °C to +220 °C	**S**
SA216WCB	12	Disc	0,5 bar		SA276 Gr. 440 / **EPDM**	-35 °C to +150 °C	**E**
			0,5 bar		SA276 Gr. 440 / **FPM Viton (FKM)**	-20 °C to +180 °C	**V**
			0,5 bar		SA276 Gr. 440 / **CR Neoprene**	-30 °C to +100 °C	**N**
			1,0 bar		SA276 Gr. 440 / **SHR**	-20 °C to +220 °C	**S**
Fig. 950/960 with soft sealing disc max. 40 bar						[1)] Fig. 900 DN20 min. 2,0 bar	

EPDM-Bellows seal (DN15 - 150)			
Pos.	**Description**	**Material**	**Temperature range**
43	EPDM-Bellows seal	EPDM 70 Shore A	-10 °C to +120 °C

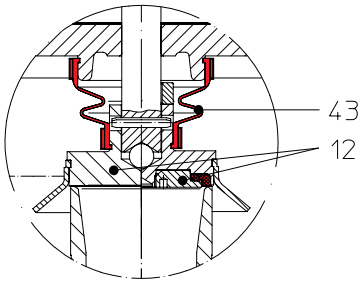

Balanced stainless steel-bellows with balanced piston (Only for closed version DN15 - 100!)		
Pos.	**Description**	**Material**
55	Bellows unit	X6CrNiMoTi17-12-2, 1.4571; SA240 / SA479 Gr.316 Ti (SAFE-SN ANSI)
70	Balanced piston	X6CrNiMoTi17-12-2, 1.4571; SA479 Gr.316 Ti (SAFE-SN ANSI)
Test: German "TA-Air TÜV-Test-No. 922-960324		

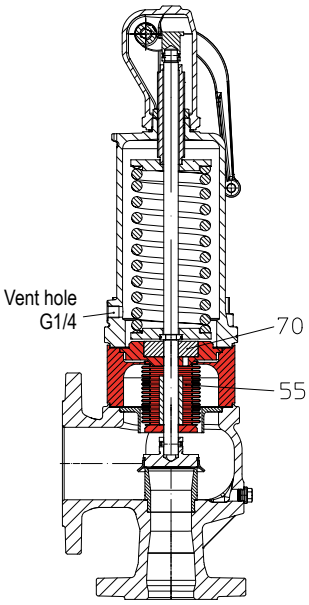

SAFE 900

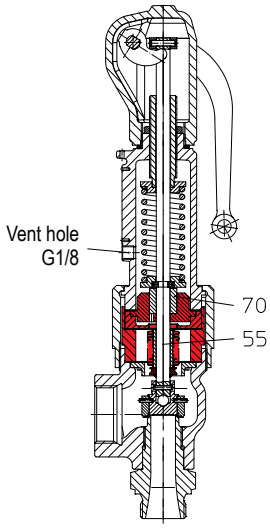

SAFE-TC 940

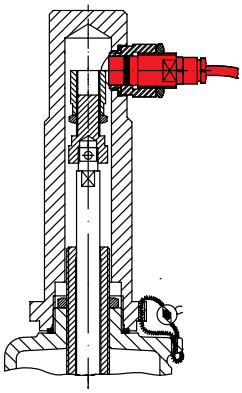

Proximity switch

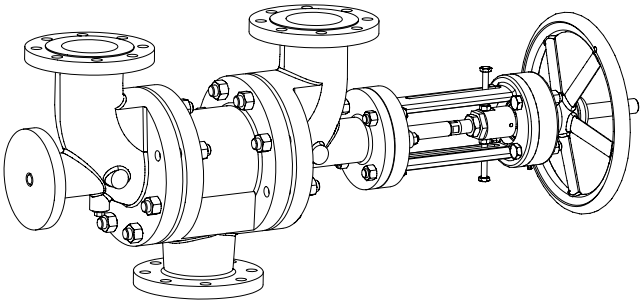

Changeover valve

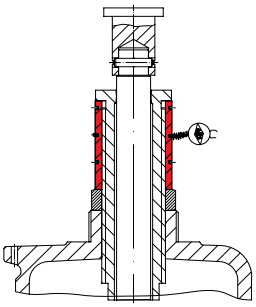

Lock bushing

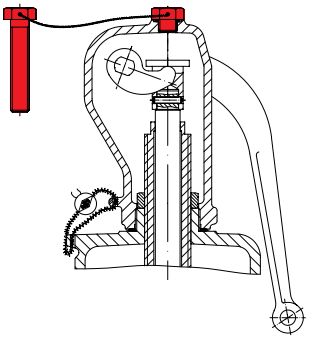

Test gag

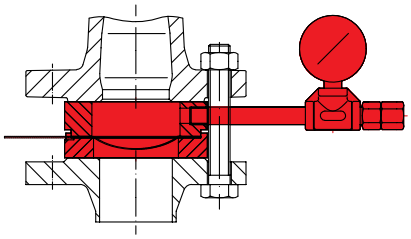

Rupture disc
(Sizing refer to page 40.)

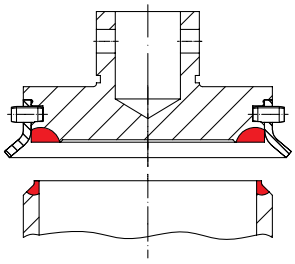

Seat 1.4571 / Stellite No. 21
Disc 1.4571 / Stellite No. 6
Sitz SA479Gr.316Ti / Stellit No. 21 (SAFE-SN ANSI)
Kegel SA479Gr.316Ti / Stellit No. 6 (SAFE-SN ANSI)
removable lifting aid

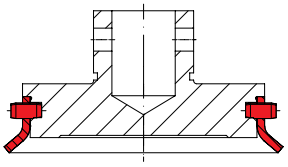

DN15-100

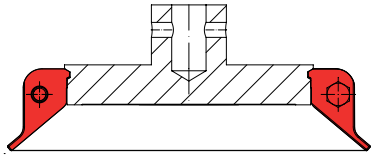

DN125-250

removable lifting aid

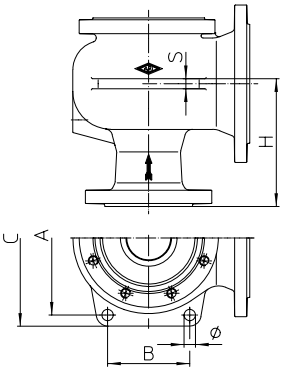

Body-Material	DN1 x DN2	A	B	C	Ø	S	H
	(mmxmm)	(mm)	(mm)	(mm)	(mm)	(mm)	(mm)
1.0619+N 1.4408	50 x 80	176	70	204	14	12	155
	65 x 100	212	90	242			175
EN-JL1040 EN-JS1049 1.0619+N 1.4408	80 x 125	245	130	280	18	16	205
	100 x 150	295	165	332			230
EN-JL1040 1.0619+N	125 x 200	318	183	362	22	20	260
	150 x 250	360	200	408		22	295
EN-JS1049 1.0619+N	200 x 300	465	256	521	26	22	305
	250 x 350	544	300	600	26	24	337

Body-Material	NPS	A	B	C	Ø	S	H
	(inch)	(mm)	(mm)	(mm)	(mm)	(mm)	(mm)
SA216WCB	2" x 3"	176	70	204	14	12	143
	3" x 4"	212	90	242			162
	4" x 6"	295	165	332	18	16	186
	6" x 8"	318	183	362	22	20	248
	6" x 10"	360	200	405	22	22	251

Support tongues, drilled

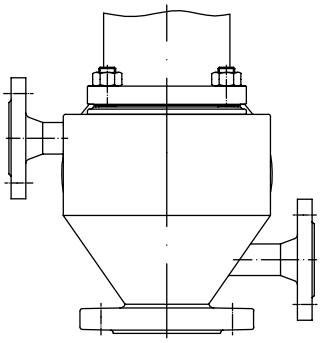

Heating jacket

	SAFE Fig. 900			SAFE-SN BR 900	SAFE-P Fig. 920	SAFE-TC Fig. 940			SAFE- TCS/ TCP Fig. 950 / 960
	Fig. 901-912	Fig. 903	Fig. 904	Fig. 901-912	Fig. 921-924	Fig. 941-943	Fig. 945	Fig. 946	Fig. 951-953 Fig. 961-963
Pressure equipment directive PED 2014/68/EU Module H1, B+D	X	X	X	X	X	X	X	X	X
BV Bureau Veritas Frankreich / France	X	--	--	X	X	X	--	--	X
DNV Det Norske Veritas Norwegen / Norway	X	--	--	X	X	X	X	X	X
GL Germanischer Lloyd	X	--	--	X	X	X	--	--	X
LROS (LRS) Lloyds Register of Shipping	X	--	--	X	X	X	--	--	--
SELO (SQLO) China / Chine	X	X	X	X	X	X	X	X	X
ASME Code Section VIII-Division 1 (UV-stamp)	--	--	--	X	--	--	--	--	--
Canada Registration (UV-stamp)	X	--	--	X	--	--	--	--	--
EAC Russland / Russia	X	X	X	X	X	X	X	X	X
RMROS (RS) Russian Maritime Register of Shipping	X	X	X	X	X	X	X	X	X
Promatomnadzor White russia (Rep. of Belarus)	X	X	X	X	X	X	X	X	X
Prombezpeka Ukraine	X	X	X	X	X	X	X	X	X
Rostechnadzor (Gosgortechnadsor) Russland / Russia	X	X	X	X	X	X	X	X	X

Single approvals									
Arbejdstilsynet Danish emploment protection	X	X	X	X	X	X	X	X	X
ABS American Bureau of Shipping	X	X	X	X	X	X	X	X	X
AIB Vincotte Belgien / Belgium	X	X	X	X	X	X	X	X	X
IBR Indien Boiler Regulations	X	--	--	X	X	X	--	--	--
ISPESL Italien / Italy	X	X	X	X	X	X	X	X	X
RINA Italien / Italy	X	--	--	X	X	X	--	--	--
Stoomwezen Niederlande / Netherlands	X	X	X	X	X	X	X	X	X
NK Japan	X	X	X	X	X	X	X	X	X
UDT Polen / Poland	X	X	X	X	X	X	X	X	X

myValve® - Your Valve Sizing-Program.

myValve® is a powerful software tool that not only helps you size your system components; it also gives you instant access to all other data about the selected product, such as order information, spare parts drawings, operating instructions, data sheets, etc., whenever you need it.

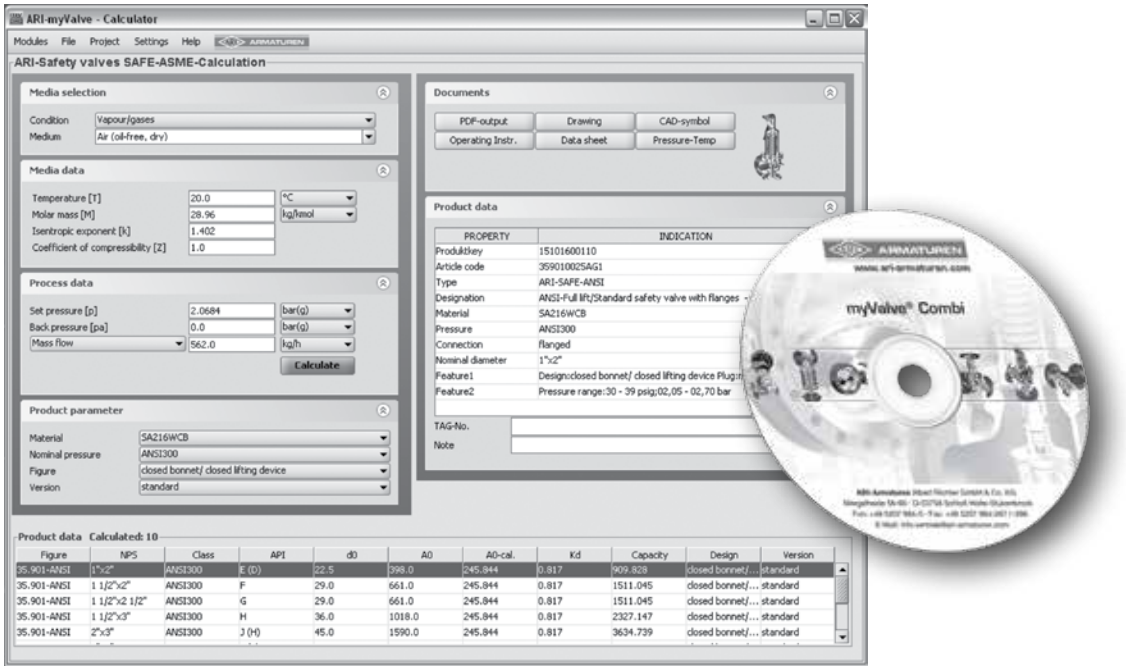

Contents:

Module ARI-Safety valve SAFE-Calculation

- Sizing of valve-size with given capacity, temperature, set pressure and back pressure;
- Sizing acc. to SAFE DIN EN, AD2000, ASME VIII, API520.

Media:

Integrated media-databank (more than 160 media) with conditions:

- Vapours / gases
- Steam (saturated and superheated)
- Liquids

Special features:

- Project administration of the calculation and product data incl. spare part drawings concerning to project and tag number.
- Direct output or calculation and product data in PDF format.
- Product data could be taken for a direct order.
- SI- and ANSI-units with direct conversion to another databank.
- Settings with over pressure or absolute pressure.
- All ARI valves are integrated in a databank.
- Direct access relating to the product on data sheets, operating instructions, pressure-temperature-diagram, controller characteristics, spare part drawings and CAD-symbols on the website.
- Operation in company networks possible (no complex installations on individually PC‘s necessary).
- Extensive catalogue extending over several product groups.

System requirements:

Windows operating systems, Linux, etc.

To ARI-Armaturen to the att. of Mrs./Mr. ..... Fax No. +49 52 07 / 994 - .....

If the type of bursting disc is not yet determined, we are offering our assistance for sizing.
Please send us the questionnaire containing the appropriate data.

Customer:	.....	**Telephone:**	.....
	.....	**Fax:**	.....
Handled by:	.....	**E-mail:**	.....
Date:	.....		.....

Necessary data

Medium:

.....

□ liquid □ gas

Temperature: .....°C

Safety valve

Type / Figure:	.....	Set pressure:	..... bar(g)
Nominal diameter: (Input / Output)	DN ..... /	Flow diameter d_0:	..... mm
Nominal pressure: (Input / Output)	PN ..... /	Flow cross-section A_0:	..... mm^2
		Certified coefficient of discharge Kdr (αw):	.....

Rupture disc

Bursting pressure:	..... bar(g)	Material:	□ 1.4401
(Bursting pressure = Set pressure of the safety valve)			□ Nickel
Tolerance:	□ + 10%		□ Inconel
	□ .....%		□ Monel
			□ Aluminium
Quantity: (incl. reserve)	piece (minimum 3 pieces recommended)		□ Teflon foil medium side
TÜV-approval:	□ yes □ no		□ other .....

Halter (incl. 1/4"-vent)

Nominal pressure:	PN	Material:	□ 1.4571
Quantity (Holder):	..... piece		□ other .....

Indication device (Pressure gauge / excess flow valve)

Quantity: ..... piece

Burst disc alarm Quantity: ..... piece

Bursting disc selection

Construction □ Reverse buckling bursting disc
□ other .....

Manufacturer / Type: □ .....

Nominal size selection of the bursting disc

- Acc. to DIN EN ISO 4126-3 and API 520 „90%-determination“
  Example:
  Max. capacity SAFE 900, DN 50, 10 bar without bursting disc = 9610 Nm³/h
  Max. capacity SAFE 900, DN 50, 10 bar with bursting disc = 0,9 x 9610 Nm³/h = 8649 Nm³/h
- Acc. to AD2000-A1 (5.4.2.2)
  $A_{geom} \times \alpha > 1{,}5 \times A_0 \times \alpha_w$

DN

Remark:

Technology for the Future.
GERMANQUALITYVALVES
ARI-Armaturen Albert Richter GmbH & Co. KG, D-33750 Schloß Holte-Stukenbrock,
Tel. +49 52 07 / 994-0, Telefax +49 52 07 / 994-158 or 159 Internet: http://www.ari-armaturen.com E-mail: info.vertrieb@ari-armaturen.com